RULES AND REGULATIONS
FOR
WATER and SEWER SERVICE

TWO RIVERS METROPOLITAN DISTRICT

Originally Adopted: July 21, 2011

Updated: April 14, 2020

Updated: March 11, 2025

TABLE OF CONTENTS

Section	Subject	Page
ARTICLE I		**1**
General		**1**
1.1	Purpose	1
1.2	Authority	1
1.3	Policy	1
1.4	Scope	1
1.5	Intent of Rules And Regulations	1
1.6	Amendment	2
1.7	Waiver, Suspension, or Modification of Rules	2
1.8	Inclusion in Contract	2
1.9	Rights and Authority	2
1.10	Authority to Inspect	2
1.11	Violators Fined	3
ARTICLE II		**4**
DEFINITIONS		**4**
2.1	Accommodation Unit	4
2.2	Applicant	4
2.3	Board	4
2.4	Commercial and/or Industrial Unit	4
2.5	Common Space	4
2.6	Contractor	5
2.7	Cooking Facility	5
2.8	Connection	5
2.8.1	Sewer	5
2.9	Crawl Space	5
2.10	Customer	5
2.11	District	5
2.12	District Engineer	6
2.13	Dwelling Unit	6
2.14	Efficiency or Studio Unit	6
2.15	Equivalent Residential Unit	6
2.16	General Manager	6
2.18	Inspector	7
2.19	Permit	7
2.20	Mixed-Use Facility	7
2.21	Multi-Unit Facility	7
2.22	Permission to Connect	7
2.23	Pollutant Discharge Regulations	7

2.24 Pretreatment Facilities 7
2.25 Private Main 8
2.26 Regulations Administrator 8
2.27 Residential Floor Area 8
2.28 Residential Unit 8
2.29 Rules and Regulations 8
2.30 Service Line 9
2.31 Sewer Main 9
2.32 Sewer System 9
2.33 Shall or May 9
2.34 Stub Out 9
2.35 Tap 10
2.36 Tap Fee 10
2.37 Tiered Rate A 10
2.38 Variance 10
2.39 Wastewater System 10
2.40 Water Main 10
2.41 Water Meter 10
2.42 Water System 10
2.43 Any Other Term 11

ARTICLE III 12

LIABILITY AND OWNERSHIP 12
3.1 Liability of District 12
3.2 Condition Not Actionable 12
3.3 Responsibility for Notification 12
3.4 Compliance with Industrial Pretreatment 12
3.5 Ownership of Facilities 12
3.5.1 Ownership of Water Facilities 13
3.5.2 Ownership of Sewer Facilities 13
3.5.3 Ownership of Water Meter 13
3.5.4 Ownership of Lift Stations 13
3.5.5 Existence of Easements 13
3.6 Conditions of Ownership 14

ARTICLE IV 15

OPERATION AND MAINTENANCE OF WATER AND SEWER SYSTEMS 15
4.1 Responsibilities of District 15
4.2 Design of Systems 15
4.3 Use of Systems 15
4.3.1 Notice of Changes 15
4.3.2 Inspection Required 16
4.3.3 Unauthorized Connection and Fees 16
4.3.4 Redetermination of Tap Fees 16
4.3.5 Revocation of Service 16
4.3.6 Suspended Service 17
4.4 Tampering with Systems 17

4.4.1 Unauthorized Use 17
4.4.2 Malicious Damage to System 17
4.4.3 Violators Prosecuted 18
4.5 Use of Water System 18
4.5.1 Owner Responsibility 18
4.5.2 Turn-On/Turn-Off of Service 18
4.5.3 Water Meters 18
4.5.4 Meter Repair 19
4.5.5 Pressure Reducing Valve 19
4.5.6 Repair of Service Line 19
4.5.7 Cross Connection Control 20
4.5.8 Safety Devices 20
4.5.9 Fire Hydrants 20
4.5.10 Clearances Around Hydrants 20
4.5.11 Fire Hydrant Meter 20
4.6 Water Use Restrictions 21
4.6.1 Waste 21
4.6.2 Restrictions of Use 21
4.6.3 Remedies for Unauthorized Use 22
4.6.4 Seals and Detection Devices 22
4.6.5 Violations 22
4.6.6 Special Permits 23
4.6.7 Water Use Efficiency Plan 24
4.7 Use of Sewer System 24
4.8 Line Locations 27

ARTICLE V 28

APPLICATION FOR SERVICE 28

5.1 Service Areas 28
5.1.1 Service Within District Boundary 28
5.1.2 Inclusions 28
5.1.3 Service Outside District Boundary 28
5.2 Application for Service 28
5.2.1 Forms and Fees 28
5.2.2 Tap Information Required 29
5.2.3 Reassessment of Tap Fees 29
5.2.4 Winter Taps 29
5.3 Special Conditions 29
5.3.1 Fire Sprinkler System 29
5.3.2 Lawn Irrigation System 30
5.4 Conditional Permit 30
5.5 Denial of Permit 30
5.6 Cancellation of Permit 30
5.6.1 Revocation of Tap Rights 30

ARTICLE VI 32

MAIN LINE EXTENSIONS 32

6.1 Main Line Extension by the District 32
6.1.1 Performance Payment and Warranty Bonds 32
6.1.2 Acceptance Procedures 32
6.2 Main Line Extensions by Developers 33
6.2.1 Locations of Main Line Extensions 33
6.2.2 Sewer Collection Lines 33
6.3 Main Line Project Procedures for Developers 33
6.3.1 Letter of Intent 33
6.3.2 Oversizing Main Lines 33
6.3.3 Application for Approval 34
6.3.4 Deposits with the District 34
6.3.5 Acceptance of Main Lines 34

ARTICLE VII 36

CROSS-CONNECTION CONTROL 36
7.1 Cross-Connection Control Authority 36
7.2 Reference Manuals Adopted for Guidelines on Cross-Connection Control 36
7.3 General Requirements 37

ARTICLE VIII 39

RATES AND CHARGES 39
8.1 General 39
8.2 Application of this Article 39
8.3 Standards of Consumption 39
8.4 Classification of Customers 39
8.4.1 Prepaid Tap Fees 39
8.4.2 Factors and Usage 39
8.4.3 Disputed Tap Application 39
8.5 Transfer of Tap Fees 40
8.6 Service Charge 40
8.7 Amended Tap Fees 40
8.8 Amended Service Charges 41
8.9 Payment of Service Charges 41
8.10 Penalty for Late Payment 41
8.11 Foreclosure Proceedings/Attorney's Fees 41
8.12 Certification of Amounts to County Treasurer 42

ARTICLE IX 43

HEARING AND APPEAL PROCEDURES 43
9.1 Application 43
9.2 Initial Complaint Resolution 43
9.3 Hearing 43
9.4 Conduct of Hearing 44
9.5 Findings 44
9.6 Appeals to the Board of Directors 44
9.7 Board's Findings 45

9.8 Notice _____ 45

APPENDIX A-SCHEDULE OF FEES AND CHARGES_____ A1

APPENDIX B- WATER AND SEWER SERVICE LINE CONSTRUCTION SPECIFICATIONS_____ B1

APPENDIX C- STANDARD SPECIFICATIONS FOR WATER LINE CONSTRUCTION _____C1

APPENDIX D-STANDARD SPECIFICATIONS FOR SEWER LINE CONSTRUCTION _____ D1

APPENDIX E- EARTHWORK AND CONSTRUCTION SPECIFICATIONS_____ E1

ARTICLE I
GENERAL

1.1 Purpose

The purpose of these consolidated Rules and Regulations is to ensure an orderly and uniform administration of water operations in Two Rivers Metropolitan District of Eagle County, Colorado. These administrative responsibilities are performed by a single organization of management, administrative and operations personnel who implement the policy and guidance of the District.

1.2 Authority

The District is a governmental subdivision of the State of Colorado and a corporate body with the powers of a quasi-municipal corporation. These powers are specifically granted for carrying out the objectives and purposes of the District as stated in the respective by-laws.

For the purposes of these Rules and Regulations, the term "District" means Two Rivers Metropolitan District.

1.3 Policy

The Board of Directors of the District hereby declares that the Rules and Regulations hereinafter set forth will serve a public use and are necessary to promote the health, safety, prosperity, security, and general welfare of the inhabitants of the District.

All customers/users of the District are bound by these Rules and Regulations as a matter of contract for which there is good and valuable consideration.

1.4 Scope

These Rules and Regulations shall be effective for the District when approved by the Board of Directors, are the comprehensive regulations which govern the operations and functions of the District, and supersede all prior publications of the Rules and Regulations of the District.

1.5 Intent of Rules And Regulations

These Rules and Regulations shall be liberally construed to affect the general purpose set forth herein, and each and every part is separate and distinct from all other parts. No omission or additional material in these Rules and Regulations shall be construed as an alteration; waiver; deviation; limitation, or restriction from any grant of power, duty, or

responsibility imposed or conferred upon the Board of Directors by virtue of statutes now existing. Nothing contained herein shall be construed as prejudice or affect the right of the District to secure the full benefit and protection of any law which is now enacted or may subsequently be enacted by the Colorado General Assembly pertaining to the governmental or proprietary affairs of the District.

1.6 Amendment

The District through the Board of Directors shall retain the power to amend these Rules and Regulations, with respect to the District, to reflect those changes determined to be necessary by the Board of Directors of the District. Prior public notice of these amendments shall not be required by the District when exercising its amendment powers pursuant to this Section.

1.7 Waiver, Suspension, or Modification of Rules

The Board of Directors, General Manager or the Regulations Administrator acting on instructions of the Board, shall have the sole authority to waive, suspend, or modify these Rules and Regulations. Any such waiver, suspension, or modification must be in writing authorizing the specific action. Such waiver, suspension or modification is an exception to the Rules and Regulations for the specific instance and shall not be construed as continuing for future instances. Waivers, suspensions, or modifications are not deemed an amendment of the Rules and Regulations.

1.8 Inclusion in Contract

These Rules and Regulations are automatically incorporated into every contract, written or oral, for service with the District whether expressly referenced or not, to the extent they are not inconsistent with the contract for service.

1.9 Rights and Authority

The District reserves the right to temporarily discontinue service to any property, at any time, for any reason deemed necessary or appropriate. The District shall have the right to revoke service to any property for violations of these Rules and Regulations in accordance with the procedures set forth in these Rules and Regulations.

1.10 Authority to Inspect

Authorized representatives of the District, upon presentation of a work order and identification, shall be permitted to enter upon all properties at all reasonable times for the purpose of inspection, observation, measurement, sampling, testing, and inspection of records of the water or sewer system, in accordance with the provisions of these Rules and Regulations. Failure to permit such inspections, observations, measurements, samplings, testing, and/or inspection of records upon the request, in writing, of the General Manager may result in a finding that permission is being denied to avoid

discovery of a violation. Such finding may result in the disconnection of service to the property occupied by the party failing to permit the desired access, subject to the hearing and appeal procedures set forth in Article VIII, *Hearing and Appeal Procedures*.

1.11 Violators Fined

Any person violating any of the provisions of these Rules and Regulations shall become liable to the District for payment of a penalty of up to $2,000 and $500 per SFE plus any expense, loss, or damage including attorney fees for enforcement action, occasioned by reason of such violation. If any person causes damage to the District system by misuse, negligence, or other action on his/her part, the District shall hold that person liable for the cost of repair including any study, investigation, or consultant fees incurred. Such costs shall constitute a perpetual lien upon the violator's property as allowed by Section 32-1-1001, C.R.S., as amended, or a perpetual lien upon the property to which the District was providing services at the time of the violation, whichever the General Manager deems appropriate.

ARTICLE II
DEFINITIONS

Unless the context specifically indicates otherwise, the meaning of the terms used herein shall be as follows:

2.1 Accommodation Unit

"Accommodation Unit" is one or more habitable rooms intended primarily for sleeping purposes and without cooking facilities. Examples of an accommodation unit are a hotel room, hotel suite, hostel room, bed and breakfast room, or a lock-off without cooking facilities.

2.2 Applicant

"Applicant" is any person who applies to the District for a service connection, service disconnection, main line extension, or other such service agreement, or who attempts to have real property included within, or excluded from the District, as the case may be.

2.3 Board

"Board" and "Board of Directors" are the elected or appointed Board of Directors of the District who have responsibility for policy and management oversight of the water and/or sewer systems.

2.4 Commercial and/or Industrial Unit

"Commercial and/or Industrial Unit" is any structure or facility that is used to engage in a business, commerce, manufacturing, marketing, and/or sale of products and services of any kind.

2.5 Common Space

"Common Space," as it applies to multi-unit facilities, includes areas which have insignificant water consumption and are accessible and available to all residents and guests of the accommodation units or dwelling units; including but not limited to: hallways, lobbies, atriums, stairways, dining areas, lounge areas, and recreation rooms. Areas which would be otherwise common space except they contain an ongoing use of water shall not be classified as common space for the purpose of these Rules and Regulations, e.g., lobby containing a bar, recreation room with a bar, etc. These excepted common areas shall be accommodated by an adjustment to the total SFE of the facility.

2.6 Contractor

"Contractor" is any person, firm, or corporation licensed or permitted to perform work and to furnish materials within the District.

2.7 Cooking Facility

A "cooking facility" is an arrangement within a dwelling unit which provides, but is not limited to, the follow features: refrigeration capability: hot plate, electrical frying pan, toaster oven, crock pot, counter top burners, stove or microwave; and facilities for washing and cleaning.

2.8 Connection

2.8.1 Sewer

A sewer connection is defined as a pipe that allows a continuous flow of sewage from a structure into a District main.

Connection for a sewer service line has not occurred if a connection of the water service line has not occurred or if an "air gap" exists within the sewer service line between the District's main and the footer and/or foundation of the structure.

2.8.2 Water

A water connection is defined as a pipe that allows a continuous flow out of a District main, into a structure, and through the meter assembly.

Connection for a water service line has not occurred if an "air gap" exists within the service line between the District's main and the structure or between the meter assembly, and the internal plumbing of the structure.

2.9 Crawl Space

"Crawl Space" is any area contained and covered by a structure that has a dirt or gravel floor and is not intended for continuous habitation.

2.10 Customer

"Customer" is any person or entity authorized to connect to and use the District's water or sewer systems under a permit issued by the District. The word "Customer" effectively encompasses owner, renter, contractor, subcontractor, developer, etc.

2.11 District

"District" is the Two Rivers Metropolitan District;

2.12 **District Engineer**

"District Engineer" is the person or firm that has been authorized by the District to perform engineering services for the District.

2.13 **Dwelling Unit**

“Dwelling Unit” is one or more contiguous, habitable rooms designed, arranged, occupied, or intended to be occupied by one or more individuals living together as a household or one family. A dwelling unit has facilities for living, cooking, sleeping or bathing and is generally configured to provide an independent access. If areas within a building or house are designed or arranged with the capability for occupancy which is independent of the rest of the household, that area is classified as a separate dwelling unit. Other features which also may indicate a dwelling unit are private telephone line, separate cable TV, lease contract, and unrelated third party occupancy. Examples of a dwelling unit are: single family homes, condominiums, townhouses, duplexes, multiplexes, apartments, efficiencies, studio units, lock-offs, mobile homes, etc.

2.14 **Efficiency or Studio Unit**

"Efficiency" or "Studio Unit" is a Residential Unit having one room with integral cooking facilities and one bathroom.

2.15 **Equivalent Residential Unit**

"Equivalent Residential Unit" or "Single Family Equivalent" (SFE) is a generic Residential Unit, the use of which is estimated to have an impact upon the water systems equal to that of the average single family (2.3 persons).

2.16 **General Manager**

"General Manager" as used in these Rules and Regulations is the person retained by the Board of Directors to administer and supervise the water and sewer affairs of the District.

2.17 Industrial Pretreatment Program

The "Industrial Pretreatment Program" ("IPP") is the industrial waste management program adopted by the Board to conform to the requirements of its Colorado Discharge System (CDPS) permit. The program is to ensure the proper pretreatment and handling of industrial sewage generated by commercial or industrial units that may have a deleterious effect on the sewage system. See APPENDIX E - POLLUTANT DISCHARGE REGULATIONS AND INDUSTRIAL PRETREATMENT PROGRAM.

2.18 Inspector

"Inspector" is a person or persons who, under the direction of the General Manager, shall inspect all water and sewer connections, main lines and appurtenances, service line joints and bedding, installations of and repairs to meters, and construction of and repairs to the water or sewer system and facilities of the District, and Users and Industrial Users to ensure compliance with the Rules and Regulations and construction standards.

2.19 Permit

“Permit” is the written permission to connect to or to enlarge the connection to the water system of the District pursuant to the Rules and Regulations. Permits are granted by the General Manager or authorized District personnel.

2.20 Mixed-Use Facility

A “Mixed-Use Facility” is a building containing one or more Residential Units, Accommodation Units, or Efficiency Units, and one or more Commercial Units.

2.21 Multi-Unit Facility

A “Multi-Unit Facility” is a building containing two or more Residential Units, Accommodation Units, or Efficiency Units.

2.22 Permission to Connect

Permission to Connect is the written permission to connect to or to enlarge the connection to the water or sewer systems of the District pursuant to the Rules and Regulations. Permission may be granted by the General Manager, Regulations Administrator or authorized District representative.

2.23 Pollutant Discharge Regulations

“Pollutant Discharge Regulations” are additional regulations adopted as part to these Rules and Regulations pertaining specifically to limits on direct and indirect contributions of toxic or hazardous substances to the wastewater collection and treatment system of the District. Compliance by customers is mandatory in accordance with the applicable State and Federal laws.

2.24 Pretreatment Facilities

"Pretreatment Facilities" are structures, devices, or equipment owned and operated by a customer for the purpose of treating or removing any substances in the waste discharge which would be harmful to the District's sewer mains or to the sewage treatment works. This reduction or alteration can be obtained by physical, chemical, or biological processes; by process changes; or by other means, except by diluting the concentration of the pollutants unless allowed by an applicable Pretreatment Standard.

2.25 Private Main

"Private Main" is any sewer interceptor, collection line, or main line, or any water distribution line or main line that is connected to the District system but not owned or maintained by the District; Private Mains have not been accepted by the District. Generally, lines are designated as private if they do not conform to the specifications as enumerated in the Rules and Regulations or construction standards. Lines may be considered private if it is not in the best interest of the District to accept the mains because of special and/or mitigating circumstances; *or* if the title of the mains cannot be transferred free and clear to the District.

2.26 Regulations Administrator

"Regulations Administrator" as used in these Rules and Regulations is the individual who, under the direction of the General Manager, is responsible to administrate and ensure compliance of these regulations.

2.27 Residential Floor Area

“Residential Floor Area” is defined as the gross square-foot measurement of Residential Unit measured to include the outside walls, excluding garages and attics but including basements.

2.28 Residential Unit

"Residential Unit" is one or more contiguous, habitable rooms designed, arranged, occupied, or intended to be occupied by one or more individuals living together as a household or one family. A Residential Unit has facilities for living, cooking, sleeping, or bathing, and is generally configured to provide an independent access. If areas within a building or house are designed or arranged with the capability for occupancy, which is independent of the rest of the household, that area is classified as a separate Residential Unit. Other features that also may indicate Residential Unit include private telephone line, separate cable TV, lease contract, and unrelated third-party occupancy. Examples of a Residential Unit are: single family homes, condominiums, townhouses, duplexes, multiplexes, apartments, efficiencies, studio units, lock-offs, mobile homes, etc.

2.29 Rules and Regulations

“Rules and Regulations” are the formal rules and regulations of the District which state the policy and procedures by which the water and sewer systems are operated. Rules and Regulations also include all amendments and policies as set forth in the District minutes and resolutions.

2.30 **Service Line**

"Service Line" is any pipe, line, or conduit used or to be used to (1) provide water service from a water main or stub out to a building or (2) to provide sewer services from a building to a sewer interceptor, stub out, or collection line whether the pipe, line, or conduit is connected or not. A water service line is owned and maintained by the District from the tap on the District water main to the property line, edge of easement, or curb stop valve, whichever is closer to the water main. A water service line tapped onto a private main shall remain property of the owner. The water service line from the curb stop valve into the building is owned and maintained by the property owner. A sewer service line is owned and maintained by the customer from the building to the District sewer interceptor, the sewer main line, or a private main. Water and sewer lines constructed by the owner shall be in accordance with these Rules and Regulations.

2.31 **Sewer Main**

"Sewer Main" is any sewer main line or sewer interceptor used as a conduit for sewage in the District's sewer system and is owned and maintained by the District. A sewer main line shall be sized in accordance with APPENDIX D - STANDARD SPECIFICATIONS FOR SEWER LINE CONSTRUCTION, unless otherwise approved by the Board of Directors.

2.32 **Sewer System**

"Sewer System" is a network of sewer collection lines, sewer interceptors, sewer main lines, wastewater treatment facilities, appurtenances, accessories, or portion thereof owned and maintained by the District. Sewer service lines or any portion therein and private sewer mains are not considered part of the District’s sewer system.

2.33 **Shall or May**

Whenever "shall" is used herein, it shall be construed as a mandatory direction.

Whenever "may" is used herein, it shall be construed as a permissible, but not mandatory direction.

2.34 **Stub Out**

"Stub out" is a connection device or line which is connected to the water or sewer main line and which is intended to facilitate the connection of a service line to the water or sewer system, either directly to the main line or indirectly through a private main. A stub out extends only from the main to the property line.

2.35 **Tap**

"Tap" is the connection of the privately owned service line to the water or sewer system, either directly to a stub out or at the curb stop valve or the main line, or indirectly through a private main line.

2.36 **Tap Fee**

"Tap Fee" is the payment to the District of a fee for the privilege of connecting to the water or sewer system. The amount of tap fees is based on the particular use of the facility being connected. See Appendix A, *Schedule of Fees and Charges*.

2.37 **Tiered Rate**

A "Tiered Rate" structure is a billing method, broken out into tiers, whereby the charge per thousand gallons of consumption becomes progressively more expensive as more water is used.

2.38 **Variance**

A "variance" is the written authorization from the District or District staff to act in a manner not in strict compliance with District Rules and Regulations, specifications, or policies. A variance may be granted at the sole discretion of the District on the basis of undue hardship, or otherwise, not self-imposed.

2.39 **Wastewater System**

"Wastewater System" is any network of wastewater main lines, wastewater treatment facilities, appurtenances, accessories, or portion thereof, owned and maintained by the District.

2.40 **Water Main**

"Water Main" is any distribution line or transmission line used as a conduit for water in the District's water system and is owned and maintained by the District. A water main shall be sized in accordance with Appendix C, *Standard Specifications for Water Line Construction*, unless otherwise approved by the Board of Directors.

2.41 **Water Meter**

"Water Meter" is defined as all components between the amended or flanged ends of the meter body. Gaskets and fittings are not considered part of a water meter.

2.42 **Water System**

"Water System" is any network of water main lines, *water treatment facilities*, appurtenances, accessories, or portion thereof owned and maintained by the District.

2.43 **Any Other Term**

Any other term not herein defined shall be as defined by the American Water Works Association (AWWA) and Wastewater Pollution Control Federation (WPCF). The use of singular may also refer to plural. The use of the masculine gender includes the feminine or neuter gender.

ARTICLE III
LIABILITY AND OWNERSHIP

3.1 Liability of District

The District shall not be liable or responsible for inadequate treatment or interruption of service brought about by circumstances beyond its control.

3.2 Condition Not Actionable

No claim for damage shall be allowed against the District by reason of the following conditions: blockage in the system causing the backup of effluent; damage caused by smoking of lines to determine connections to District lines; breakage of main lines; interruption of water or sewer service and the conditions resulting therefrom; damage from the breaking of any service or collection line, pipe, cock, or meter; failure of the water supply; shutting off or turning on water; installation of connections or extensions; damage caused by water running or escaping from open or defective faucets; burst service lines or breakage of other facilities not owned by the District; damage to water heaters, boilers, or other appliances resulting from shutting water off, or from turning it on, or from inadequate, excessive, or sporadic pressures; or from doing anything to the systems of the District deemed necessary by the Board of Directors or its agents.

3.3 Responsibility for Notification

The District has no responsibility to notify customers of any occurrence of the foregoing conditions.

3.4 Compliance with Industrial Pretreatment

The District has the authority to require all users (in District and out of District) to comply with the Pollutant Discharge Regulations (PDR) and the Industrial Pretreatment Program (IPP), to require compliance with pretreatment standards; to require monitoring and reporting; to issue notices of violation, compliance orders, cease and desist orders, administrative fines, emergency suspensions; and to seek judicial remedies for any uses as allowed under the PDR or IPP. The PDR and IPP are incorporated and adopted herein as APPENDIX E - POLLUTANT DISCHARGE REGULATIONS AND INDUSTRIAL PRETREATMENT PROGRAM, to these Rules and Regulations.

3.5 Ownership of Facilities

All existing main lines and treatment works connected with and forming an integral part of the water or sewer system are the property of the District, unless a contract with owner or customer provides otherwise. Ownership will remain valid whether the main lines and treatment works were constructed, financed, paid for, or otherwise acquired, by the

District or by private parties. Transfer of ownership of main lines shall be in accordance with Section 6.3, *Main Line Project Procedures for Developers*. The developer is responsible for correction of construction deficiencies within the *two*-year warranty period. Exceptions to District ownership are private mains which specifically are not accepted by the District due to non-conformance to these Rules and Regulations, the Standard Specifications for Water Line Construction, the Standard Specifications for Sewer Line Construction and other approved standards of construction. Private mains are designated when ownership title cannot be provided free and clear.

3.5.1 **Ownership of Water Facilities**

For water, the District owns and is responsible for the maintenance of the water service line up to and including the curb stop valve or the customer's property line or edge of easement, whichever is closer to the water main. The customer is responsible for the maintenance of the remaining portion of the service line serving his property. This principle of ownership shall not be changed by the fact that the District may construct, finance, pay for, repair, maintain, or otherwise affect the customer's service line.

3.5.2 **Ownership of Sewer Facilities**

For sewer, the entire service line from the building to the main line is the property of the customer who is responsible for its maintenance. This principle of ownership shall not be changed by the fact that the District may construct, finance, pay for, repair, maintain, or otherwise affect the customer's service line.

3.5.3 **Ownership of Water Meter**

Each water meter shall become and is the property of the District. Ownership shall remain valid whether the meter is installed, financed, paid for, repaired, or maintained by another person or whether the meter is located on a privately owned and maintained service line. The meter is defined as the meter body and components contained therein. *Gaskets and fittings are <u>not</u> considered part of the meter.*

3.5.4 **Ownership of Lift Stations**

A lift station associated with customer service lines shall be the property of the owner(s) served by such lift station. Maintenance of such lift station is the sole responsibility of the owner(s) and shall not be the responsibility of the District.

3.5.5 **Existence of Easements**

An easement, whether recorded or not, and whether the main line is actually within a recorded easement, is deemed to exist if a Customer is receiving and accepting service from a service line connected to a main line. The District shall have access over said easement to affect repairs, maintenance and replacement.

3.6 Conditions of Ownership

The customer's ownership of the service line shall not entitle the customer to make unauthorized uses of the District's systems or to make alterations to the service line and the system once the service line has been connected to a District main line. All uses or changes in use of the service line, any appurtenances thereto, or changes in use of the property served at any time after the initial connection to the District system shall be subject to these Rules and Regulations.

ARTICLE IV
OPERATION AND MAINTENANCE OF WATER SYSTEMS

4.1 Responsibilities of District

Except as otherwise provided by these Rules and Regulations, the District is responsible for the operation and maintenance of the sewer and/or water systems in accordance with these Rules and Regulations.

4.2 Design of Systems

Sewer systems must have adequate gravity drainage. Lift stations will not be accepted by the District without written permission from the District. Permission for the construction of lift stations must occur before construction plan approval occurs. Water systems must have adequate gravity fed finished water storage.

4.3 Use of Systems

Taps and service connections are approved for specific uses as stated on the water tap application and the sewer tap application. The Regulations Administrator may request an inspection in accordance with Section 1.10, *Authority to Inspect*, to identify any unauthorized use for which the customer is subject to a fine in accordance with Section 1.11, *Violators Fined*.

4.3.1 Notice of Changes

The customer shall notify the District prior to any expansion or addition to the service or any change in the use of the property served by the District and upon any change of ownership of said property. Any such change in use which, in the opinion of the District, will increase the burden placed on the District's system by the customer shall require a redetermination of the tap fee and monthly service charge, and a payment by the customer of any additional tap fee and monthly service charge resulting from the redetermination. When an expansion or change in use occurs that results in additional fees due, a credit for the existing use shall be given. Tap fees based on the current rate for the specific use as stated in the original permit shall be credited against the redetermined tap fee so that only the unpaid portion of any redetermined tap fee shall be due. However, if the redetermination results in a conclusion that the tap fee, if assessed currently, would be in an amount less than the tap fee originally paid, the redetermined fee shall not result in a refund to the customer. For example, if a structure changes from two units to three units without expanding the square footage of the structure, the additional tap fees shall be calculated giving full credit to the two units and the square footage for which tap fees were previously paid or payable.

4.3.2 **Inspection Required**

Any customer believed to have changed equipment, service, or use of his property, in violation of this section, shall be notified of such belief by the District, and shall be afforded twenty (20) days from the date upon which the notice is mailed in which to respond to the District's notice. Any response by the customer must include permission to make an inspection of the property as the District may deem necessary to establish clearly the nature of equipment, service and use of the property. Failure to respond may result in the District discontinuing service to the property.

4.3.3 **Unauthorized Connection and Fees**

No person shall be allowed to connect onto the sewer or water systems or to enlarge or otherwise change equipment, service, or use of property without prior payment of tap fees, approval of a permit for service, and adequate supervision and inspection of the tap by District employees. Any such connection, enlargement, or change without payment, approval, supervision, and inspection shall be deemed an unauthorized connection.

Any violation of this section shall result in the assessment of an unauthorized connection fee. The District shall take those steps authorized by these Rules and Regulations and Colorado law regarding the collection of said fees.

Upon the discovery of any unauthorized connection, the then-current tap fee and accrued service charge, if any, shall become immediately due and payable, and the property shall automatically be assessed an additional unauthorized connection fee equal to the then-current tap fee per equivalent dwelling unit, as liquidated damages toward the District's costs associated with such unauthorized connections. The District shall send written notice to the owner of the property benefited by such connection stating that an unauthorized connection has been made between the owner's property and the District facilities. The owner shall have twenty (20) days from the date the notice is mailed to pay the then-current tap fee and accrued service charges, if any. If not paid within this period, the District shall proceed in accordance with the provisions of Section 4.3.5, *Revocation of Service.*

4.3.4 **Redetermination of Tap Fees**

Following inspection, the District shall make a determination as to the change in the customer's equipment, service or use of the property in question, and shall redetermine any additional tap fees and service charges due. In the event the decision of the District is deemed unsatisfactory to the customer, the customer may present a complaint in accordance with Article VIII, Hearing and Appeal Procedures, of these Rules and Regulations.

4.3.5 **Revocation of Service**

Service shall be revocable by the District upon non-payment of any valid fees or charges owed to the District. In the event of non-payment, the customer shall be

given not less than twenty (20) days advance notice in writing of the revocation. The notice shall set forth:

1. The reason for the revocation;

2. That the customer has the right to contact the District, and the manner in which the District may be contacted for the purpose of resolving the obligations; and

3. That there exists an opportunity for a hearing in accordance with Article VIII, Hearing and Appeal Procedures, of these Rules and Regulations.

4.3.6 **Suspended Service**

When a building is moved or destroyed and the water services are suspended, the original tap authorization shall remain, provided that a written request is made to, and approved by the Regulations Administrator prior to cessation of payment of service charges.

When a service line is abandoned permanently, the property owner shall valve the water supply off at the main line (corporation stop valve). If the property owner is not responsive within a reasonable time period as determined by the Regulations Administrator, the District will valve the water supply and plug the sewer service line. The cost shall be charged to the owner and a lien filed on the property. Variances to this requirement will be considered on a case-by-case basis.

4.4 **Tampering with Systems**

4.4.1 **Unauthorized Use**

No person shall uncover, alter, disturb, make any connection with, make an opening into, or backfill prior to inspection the water or sewer system without a written authorization from the District. Unauthorized uses of or tampering with the District's systems include, but are not limited to, change in customer's equipment, service or use of property, as defined in Section 4.3, Use of Systems; an unauthorized turn-on or turn-off of water service or a water main; burying valve boxes; modifying any water meter and discharging prohibited sewage even though the same may be performed on a privately owned and maintained service line. All water use must be metered. Any unmetered use is considered to be unauthorized use, unless approved by the District.

4.4.2 **Malicious Damage to System**

No person shall maliciously, willfully, or negligently, break, damage, destroy, cover, uncover, deface, or tamper with any portion of the District's system.

4.4.3 **Violators Prosecuted**

Any person who shall violate the provisions of this Section 4.4, Tampering with Systems, shall be assessed a $2,000.00 fine for each violation, and shall be prosecuted to the full extent of Colorado law for tampering or malicious damage to District property.

4.5 **Use of Water System**

4.5.1 **Owner Responsibility**

Each owner shall be responsible for all costs associated with the maintenance of the service line from the building to the curb stop, *edge of easement* or property line, whichever is closer to the main.

4.5.2 **Turn-On/Turn-Off of Service**

All routine turn-on and turn-off of water service at a curb stop shall be performed only by District personnel. During emergencies, a customer/owner may turn-off the water service at the curb stop valve. The District shall be notified of the turn-off and the circumstances at the earliest time. Only District personnel shall turn-on the water service.

When initial service is provided and when the turn-off/turn-on service is performed for a customer requiring maintenance to his service line, a service fee will not be charged. In other circumstances the District shall assess a single turn-off/turn-on charge in the amount of $100 for each turn-off and turn-on performed. In each case where turn-off of water service is caused by non-payment or late payment of service charges and fees, the turn-on service fee will be $200. These rates shall be increased by the Denver Aurora Lakewood CPI as published by Bureau of Labor Statistics or similar index in the event this index is unavailable. The service fee will be increased in increments of $50 per instance of turn-on over a consecutive 12-month period. Payment of all charges and fees are required in full prior to turn-on of the water service. All other requests for a turn-off or turn-on of water service may be granted or denied by the District at the District's sole discretion.

The District will provide turn-on service for a tap for new construction only one time prior to the occupancy of the building served. At the time the water meter is set, service charges begin unless the District is requested to perform the turn-off. In this event the customer will be charged $50 when service is turned on.

If a customer/owner requests to have water service to their home turned off for a period of time, all water base fees will continue to be assessed on a monthly basis to the customer/owner.

4.5.3 **Water Meters**

All connections to the District's water system shall include a water meter. All water meters shall have devices for remote reading The type of water meter and

location of the meter shall be subject to the approval of the District and accessible for maintenance (see Appendix B, Water Service Line Construction Specifications). The District shall have the right to test, remove, repair, or replace any and all water meters. Any meter not installed in accordance with District specifications shall be immediately replaced upon notification by the District and the owner may be subject to a fine for illegal tampering of the water system.

Each owner is responsible for notifying the District if his water meter is operating defectively. If any meter is suspected to be defective, the District shall diligently pursue inspection of the broken water meter. If a meter replacement is needed, the meter shall be obtained from the District and the owner shall be responsible for repair or replacement of the meter and reimbursing the District for the meter cost.

During the interim period prior to repair, the following procedure shall be enforced. The owner shall be given notice, by first-class mail, that the District suspects that the water meter is defective. The owner shall be given thirty (30) days in which to respond and schedule with the District an appointment for a meter inspection and replacement. If the owner fails to respond, the owner will be placed on the broken water meter rate of $200.00 per single-family equivalent per month, effective with the following billing cycle.

The owner shall be given a second notice, by first-class mail, that the District suspects that the water meter is defective. The owner shall be given thirty (30) days in which to respond to the second notice, which includes scheduling an appointment for a meter inspection and replacement. If the owner fails to respond to the second notice, the District may disconnect the water service and charge the owner the broken meter water rate of $200.00 per single family equivalent while the service is disconnected. Service will be restored only upon payment of the turn off and turn on fees.

4.5.4 **Meter Repair**

The provisions of Section 4.5.3 notwithstanding, all meters will be repaired at the owner's expense. The customer shall be charged the District's costs incurred.

4.5.5 **Pressure Reducing Valve**

A pressure-reducing valve (PRV) shall be installed in all service lines before the water meter, ensuring that the water meter and the building plumbing system, including any fire sprinkler system, are protected from fluctuating water main pressures. The pressure setting of the PRV shall not exceed 100 psi without written permission from the District.

4.5.6 **Repair of Service Line**

Leaks, breaks and general maintenance of the water service line shall be the responsibility of the property owner. The owner shall be given notice by first-

class mail, that the water service line is defective and in need of repair. Owner shall institute repair or maintenance immediately. If satisfactory progress toward repairing the service line has not been completed in a timely manner or the District determines that environmental or property damage is being caused, the District shall shut off the water service until the service line has been repaired. In addition, the District shall have the right to affect the repair, and the costs therefore shall constitute a lien on the property as provided for by C.R.S., 32-1-1001.

4.5.7 **Cross Connection Control**

Each customer is responsible for complying with the Colorado Department of Health's Cross Connection Control Manual.

4.5.8 **Safety Devices**

Each owner having boilers and/or other appliances which depend on pressure or water in pipes, or on a continual supply of water, shall provide, at his own expense, suitable safety device to protect himself and his property against a stoppage of water supply or loss of pressure. The District expressly disclaims any liability or responsibility for any damage resulting from a customer's failure to provide such appropriate protection.

4.5.9 **Fire Hydrants**

It is unlawful for any person to operate District valves or fire hydrants without prior written authorization by the District. Law enforcement officers, personnel of the District, or personnel of a fire department are authorized to confiscate any hydrant wrench or valve shut-off key found to be used without written District authorization. Any violation shall be considered "Unauthorized Use" and will be subject to all fines and fees therein.

4.5.10 **Clearances Around Hydrants**

No landscaping, retaining walls, or buildings may obstruct the access to fire hydrants. Minimum clearances must be maintained around fire hydrants to facilitate their use. Property owners are responsible to maintain a seven-foot (7') clearance on either side (where 2½" connectors are located), four-foot (4') clearance (including landscaping, retaining walls) on back, ten-foot (10') clearance in front (where steamer connection is located), and twenty-five-foot (25') clearance above all fire hydrants. The breakaway collar must be six inches (6") above the finished grade.

4.5.11 **Fire Hydrant Meter**

Fire hydrant meters are allowed to be used by special permit and are allowed to be used between April 15 and October 15, provided freezing at night is not occurring. Only District personnel are allowed to install and remove fire hydrant meters unless a written variance is issued. The customer will be subject to a penalty if he attempts to install or remove a fire hydrant meter. The customer is

responsible for any damage to fire hydrants or fire hydrant meters, including vandalism or freezing. .

A deposit in an amount determined by the District is required which if fully refundable, provided the meter is returned in good condition. A schedule of the fire hydrant meter deposits is available from the District. A $50.00 installation and removal charge, payable in advance, is required (non-refundable). The minimum billing shall be $46.55 per month, plus $6.00 per 1,000 gallons.

Fire hydrant water shall not be used for drinking purposes at anytime. If the water is to be used for lawn irrigation, the customer shall provide a backflow device. A relocation fee of $25.00 to move the fire hydrant meter from one fire hydrant to another is required. Only District personnel are allowed to move fire hydrant meters. Contractors will be subject to a penalty if they attempt to move or alter a fire hydrant meter.

Short term use of fire hydrant meters is allowed without a deposit. The cost to the customer is $30.00 per hour, plus $6.00 per 1,000 gallons. District personnel will be present the full time the fire hydrant meter is out in the field under the short term use.

4.6 Water Use Restrictions

The District is responsible for protecting an adequate supply of water to its consumers. The District recognizes that certain conditions may exist when water supply is temporarily limited. At the sole discretion of the Board, this Section 4.6, Water Use Restrictions, will go into effect for limited periods of time.

4.6.1 Waste

Water shall be used only for beneficial purposes and shall not be wasted. Any instance of flagrant runoff or waste will be considered a violation of these Water Use Restrictions and subject to the penalties provided for in Section 4.6.5. Water for irrigation of lawns and other outside uses shall be used pursuant to regulations of the District.

4.6.2 Restrictions of Use

If conditions of supply so limit the water supply of the District's water system that unrestricted water use may endanger the adequacy of that supply, the Board of Directors, exercising its discretion in the protection of the public health, safety, and welfare, may by resolution adopt the following emergency water use restrictions and such additional regulations and restrictions as are reasonably calculated under all conditions to conserve and protect that supply and to insure a regular flow of water through that system. Emergency water use regulations and restrictions shall remain in force and effect until the Board determines that the conditions requiring their imposition no longer exist.

Subsequent to adoption by resolution of the Board and commencing June 1, and continuing through September 30, no water shall be used for lawn irrigation or other purposes outside the residence, apartment building, commercial building, or other structure (hereinafter referred to as the "Building") except as follows:

1. Premises with even-numbered addresses may use irrigation water on said premises outside said buildings on Sundays, Wednesdays, and Fridays.

2. Premises with odd-numbered addresses may use irrigation water on said premises outside said building on Tuesdays, Thursdays, and Saturdays.

3. Swimming pools will be limited to one filling unless draining for repairs is necessary.

4. No irrigation shall be permitted at any time by use of free running hose without nozzle or sprinkler.

5. Nothing herein shall prevent the imposition of a total ban on outside water use in the event of an extreme emergency, nor to further create an exception to meet a specific water supply condition.

4.6.3 **Remedies for Unauthorized Use**

Any unauthorized use of water shall be paid for at the same rate as if that use had been authorized together with the costs incurred by the District in discovering and collecting for the unauthorized use. Such payments shall not in any way affect the right of the District to disconnect or suspend water service to any customer for unauthorized use, or to charge additional penalties or pursue such other remedies as may be authorized by law or approved by the Board of Directors of the District; nor shall it affect any criminal liability which may have attached by reason of such authorized use.

4.6.4 **Seals and Detection Devices**

The District may require that seals be attached to any water using system in or about a customer's premises in order to detect any unauthorized use of water from that system. If necessary, the District may also require that mechanical devices be attached to any water using system in or upon a customer's premises in order to detect any unauthorized use of water from such system. Such mechanical devices may be inspected on behalf of the District at any reasonable time.

4.6.5 **Violations**

The violation of any water use regulation or restriction or waste of water shall be considered grounds for the disconnection or suspension of water service to any customer, premises, building or water facility. The customer using the premises, building, or facility shall be responsible for complying with the regulations and/or restrictions and violators of said regulations and/or restrictions will be subject to the following actions and penalties:

1. In the event of a first violation, the customer will be advised in writing of said violation and informed that a monetary charge will be added to the water bill for subsequent violations.

2. In the event of a second violation at the same location, the customer will be advised in writing of said violations and a $25 charge will be added to the water bill for said location.

3. In the event of a third or any subsequent violation at the same location, the customer will be advised in writing of said violations and a $50 charge will be added to the water bill for said location.

4. Continuing waste of water or willful violation of any regulation and/or restriction is cause for disconnection or suspension of water service.

4.6.6 **Special Permits**

The District may issue special permits as follows:

1. When there are circumstances which do not permit a water user to comply with the regulations and restrictions and deliver one inch (1”) of water per week on landscaped grounds of the premises, provided the customer submits a plan describing the area to be served and the method to be used to deliver an adequate amount of water.

2. For watering newly-sodded lawns and newly planted trees and gardens each day for a period not to exceed 14 consecutive days, and at a rate not to exceed one inch (1”) per week or for watering newly seeded lawns each day for a period not to exceed 25 consecutive days and at a rate not to exceed one inch (1”) per week.

3. For neighborhood gardens, and if water for such gardens is obtained from a nearby residence, additional watering days may be allocated to that particular residence for the watering of such garden.

4. For daily watering of outside stock at nurseries, greenhouses, and stores.

5. There shall be a charge of $15 for each permit issued.

6. Violation of the terms of a permit will be cause for immediate revocation of the permit.

7. The District shall have authority to interpret, apply, and enforce the Board's Rules and Regulations for water use restrictions to prevent undue commercial or business hardship and may issue special use permits in furtherance of this authority.

4.6.7 **Water Use Efficiency Plan**

The Board of Directors or its designated representative, when it deems necessary will dispersed to its users a water use efficiency plan which may address the following issues:

1. Water efficient fixtures and appliances including toilets, urinals, showerheads, and faucets;

2. Low water use landscapes and efficient irrigation;

3. Water efficient industrial and commercial water using processes;

4. Water reuse systems, both potable and nonpotable;

5. Distribution system leak repair;

6. Dissemination of information regarding water use efficiency measures, including by public education, customer water use audits, and water saving demonstration;

7. Water rate structures designed to encourage water use efficiency in a fiscally responsible matter;

8. Regulatory measures, including standards for the use of water use efficiency fixtures and landscapes, and ordinances, codes, or other law designed to encourage water use efficiency; and

9. Incentives to implement water use efficiency techniques, including rebates to customers or others to encourage the installation of water use efficiency measures.

Upon its dissemination, the plan shall become the policy of the District and a part of these Rules and Regulations.

4.7 **Use of Sewer System**

4.7.1 Customer Responsibility

Each customer shall be responsible for all costs associated with the maintenance of the service line from the building to the sewer interceptor or sewer main.

4.7.2 Sewer Service Lines

Each customer shall be responsible for the total cost of constructing and maintaining the entire length of the sewer service line serving his property and/or any related service facilities, including but not limited to, private lift stations.

4.7.3 Repair of Service Lines

Leaks, breaks and general maintenance of the sewer service line shall be the responsibility of the property owner. The customer shall be given notice by first-class mail, that the sewer service line is defective and in need of repair. Customer shall institute repair or maintenance immediately. If satisfactory progress toward repairing the sewer service line has not been completed in a timely manner, or the District determines that environmental or property damage is being caused, the Regulations Administrator shall shut off the water service until the sewer service line has been repaired. In addition, the District shall have the right to affect the repair. The cost therefore shall constitute a lien on the property of the customer as provided for by C.R.S., 32-1-1001.

4.7.4 Prohibited Discharges
No person shall discharge, or cause to be discharged, any storm water, surface water, groundwater, roof runoff, subsurface drainage, metal sludge, toxic matter, hazardous material, ignitable material, unprocessed industrial wastes to any sanitary sewer, or any other prohibited discharges listed in APPENDIX E - POLLUTANT DISCHARGE REGULATIONS AND INDUSTRIAL PRETREATMENT PROGRAM.

4.7.5 Pollutant Discharge Regulations and Industrial Pretreatment Program
All District users are required to comply with the pretreatment requirements pursuant to the PDR and IPP. The Pollutant Discharge Regulations and Industrial Pretreatment Program are contained in APPENDIX E - POLLUTANT DISCHARGE REGULATIONS AND INDUSTRIAL PRETREATMENT PROGRAM.

Notwithstanding the provisions of Section 1.7 Waiver, Suspension, or Modification of Rules, no waiver, suspension or modification is authorized of these Rules and Regulations or the PDR and IPP as they apply to Categorical Treatment Standards, for approved local limits for toxic pollutants, and to federally required general prohibitions.

It shall be unlawful to discharge any silver or mercury containing sewage, except for certain "de-minimus" discharges, which have been approved by the District's Regulation Administrator. The intent is to prevent any addition of silver and/or mercury to the sewage. It is recognized that minimal background levels of silver or mercury may exist in the User's supplied tap water, and the User is not responsible for removing these inputs prior to discharge. For purposes of this section, "de-minimus" discharges are defined as discharges containing extremely small (as determined by the District) mass loads of silver and mercury, which have a negligible effect on the waste water treatment facility and its ability to comply with silver and mercury effluent limits, and which would be technically and economically difficult to prevent from entering the wastewater system. The burden shall be on the User to justify the necessity and basis for the issuance of approval of "de-minimus" status.

4.7.6 Pretreatment Facilities
Where necessary, in accordance with the PDR and IPP, the customer shall provide, at his expense, such pretreatment facilities as may be necessary to treat special sewage prior to discharge to the sewer main. Such facilities shall be maintained continuously in satisfactory and effective operation by the customer, at his expense.

4.7.7 Control Manhole
When required by the District, any customer served by a service line carrying special sewage shall install and maintain, at his expense, a suitable control manhole in the service line to facilitate observation, sampling, and measurement of the wastes. A control manhole on the sewer service line for monitoring sewage will be required for all restaurants and bakeries. All measurements, tests, and analyses of the characteristics of special sewage waters and wastes shall be determined in accordance with the PDR and IPP. Measurements and tests shall be determined at the control manhole, or upon suitable samples taken at the control manhole. In the event that no special manhole has been required or installed, the District should specify an appropriate sampling point.

4.7.8 Grease Traps
A grease trap will be required for all restaurants and bakeries due to their sewage having an adverse grease impact on the District's system. The grease trap shall be sized in accordance with the most recent Uniform Plumbing Code and installed by the customer. Because of the characteristics of the sewage discharge from the grease trap, special consideration should be given to the design of the outfall line in order to prevent freezing. Grease traps shall be maintained by the customer on a regularly scheduled basis to ensure proper operation. The District has the authority to inspect grease traps and review and copy operating records to ensure that proper maintenance is being performed. Chemicals that have an adverse effect on the District sewer system are prohibited from use for dissolving grease.

If at a later time the District determines that the sewage contains grease having an adverse effect on the sewer system, the customer will be required to install a larger grease trap within 90 days of official notification.

Failure to comply with the provisions of this section may result in the District performing the cleaning of the grease trap with all costs billed to the customer and/or a lien filed on the property and may result in disconnection of water service.

4.7.9 Sewer Main Access Easements
Any landscaping improvements shall be precluded from easements that are expressly designated and granted and upon which an access platform has been constructed, and which route is necessary to serve as the only access to District facilities. Examples of such improvements may include but are not limited to

trees, berms, bushes, rock walls, and any landscaping or improvements that would inhibit the District's access to and along the access easement.

4.8 Line Locations

Upon request of a customer, the District will attempt to locate and mark all water lines and sewer lines to the best of its ability by using available information. Basic line locations will be made free of charge, but the District will not accept financial liability to any party for any costs incurred as a result of an inaccurate location.

ARTICLE V
APPLICATION FOR SERVICE

5.1 Service Areas

5.1.1 Service Within District Boundary

Water system and/or sewer system service will be furnished in accordance with the District's Rules and Regulations to property included within and subject to the Rules and Regulations of and taxation by the District.

5.1.2 Inclusions

A person who desires service and who owns land both within and outside the boundaries of the District must include all of his land outside the District which is serviceable by the system and is contiguous to the parcel on which service is desired. A formal request for inclusion within the District shall be made to the District, on its standard form, by the applicant, accompanied by a non-refundable payment of $1,000 for legal fees and the estimated cost of processing the application for inclusion. Any additional costs or legal fees that may occur shall be assessed and paid prior to approval of inclusion by the Board. Until paid, such additional costs and fees shall be a lien upon the property.

5.1.3 Service Outside District Boundary

No water system service shall be provided to property exclusively outside of the District, except upon the express written consent of the Board. Charges for furnishing service outside of the District shall be at the discretion of the Board. The charge for service furnished shall equal at least the cost of service, plus the estimated property tax and tap fees for which such property would be responsible if it were a part of the District. In every case where the District furnishes service to property outside the District, the District reserves the right to discontinue the service when, in the judgment of the Board of Directors, it is in the best interest of the District to do so.

5.2 Application for Service

5.2.1 Forms and Fees

Application for water and/or sewer service must be furnished to the District and accompanied by appropriate fees. Water tap fees must be paid no later than the date a building permit is obtained for construction of the related improvements. A connection to the system shall be made only by District authorized contractors observed by district personal, upon authorized approval of the permit and a receipt indicating payment of all fees.

5.2.2 **Tap Information Required**

All information requested on the tap permit form must be completed. A site plan or improvement plan showing the location of the building relative to property lines, utility lines, curb stop valve box location, and all easements shall be provided for the tap permit. A copy of the building permit application form and a copy of the building floor plan shall be provided for the tap permit. The building floor plan shall indicate the location of the water meter, the remote reading device, and the telephone jack location. For commercial applications, the District will require an Engineer's or Architect's assessment of the meter size necessary to serve the commercial and irrigation fixtures involved. The meter size is to be determined by the fixture count assessment according to the Uniform Plumbing Code.

5.2.3 **Reassessment of Tap Fees**

Should any information disclosed on the application prove at any time to be false, or should the applicant omit any information, the District shall have the right to: reassess the tap fee originally charged to the rate current at the time of discovery by the District of the false or omitted information, and/or disconnect the service in question, and/or back-charge the property in question for tap fees and service fees that may be due and owed, and/or charge any other additional fee or penalty specified in these Rules and Regulations. Any reassessment, penalties, or other additional fees charged, with interest at the maximum legal rate on the entire balance upon and from the date of the original application, shall be due and payable immediately.

Should the metered consumption or approved usage exceed the conditions upon which the original tap fees were paid, the District reserves the right to reassess the tap fees originally charged to the rate current at the time of discovery by the District.

5.2.4 **Winter Taps**

During the winter months (**October** 15 to April 15), taps may be made by appointment, at the District's sole discretion, provided that the tap location is heated or protected from freezing.

5.3 **Special Conditions**

5.3.1 **Fire Sprinkler System**

If a fire protection water sprinkler system is to be used, a plan of the system which has been approved by the appropriate District Fire Authority is to accompany the application. All fire sprinkler systems shall meet National Fire Protection Association (NFPA) requirements and additionally shall meet the requirements of all applicable city, county, and state building and fire protection codes. All fire sprinkler systems shall be protected from fluctuating water main pressures by means of a pressure-reducing valve. Waivers may be granted by

District with a written request from the applicant. As dictated by the State of Colorado, all fire sprinkler systems shall be equipped with a backflow prevention device appropriate to the degree of hazard contained therein.

5.3.2 **Lawn Irrigation System**

A lawn sprinkler or irrigation system must be metered. If a lawn sprinkler or irrigation system is to be installed as part of the property development, this system may be independent of any commercial, domestic, or industrial uses and may be separately metered. The connection of the lawn sprinkler or irrigation system shall be inspected by the District prior to use. As dictated by the State of Colorado, all lawn irrigation systems must have a reduced pressure principle backflow prevention device installed on the system.

5.4 Conditional Permit

The District reserves the right to issue a conditional permit with a notice filed against the property title. The notice will indicate the existence of a condition(s), which is not in compliance with District Rules and Regulations, but still allow water service to the property. The notice will provide that as a condition of receiving service the property owner agrees to indemnify and hold the District harmless for any damage resulting from existence of the condition. Examples are connection to private mains not owned or maintained by the District, lack of easements for access and maintenance, and construction not in accordance with District specifications.

5.5 Denial of Permit

The District reserves the exclusive right to deny application for service when, in the opinion of the District, the service applied for would create an excessive seasonal or other demand on the facilities. Denial may also be based upon an unresolved obligation between the District and the applicant, inadequate documentation of easements for main lines serving the property, or any other reason as determined by the District.

5.6 Cancellation of Permit

The District reserves the right to revoke any prior approval of a permit before service has been provided, and the right to revoke service after it has commenced for any violation of these Rules and Regulations.

5.6.1 **Revocation of Tap Rights**

The right to connect to the District's system and to receive services under Section 4.3, Use of Systems, shall be revocable by the District upon non-payment of any fees owed to the District and remaining unpaid for a period of thirty (30) days, whether or not the customer owning the right to connect has actually connected to the District's system. Such revocations shall be conducted in accordance with the procedures outlined in Section 4.3.5, Revocation of Service. If the right to connect to the District's system is revoked, the customer may reacquire such tap

rights by reapplying for service in accordance with Section 5.2, Application for Service. The reapplication will be considered only after payment of all fees due and owed the District and the current tap fees charged by the District under these Rules and Regulations.

ARTICLE VI
MAIN LINE EXTENSIONS

6.1 Main Line Extension by the District

The District may construct any main line if the Board deems it in the best interest of the District to do so. All main line extensions, which are so authorized, shall be bid competitively, when required by state law, and contract awarded under the authority of the Board. The contractor installing the main lines shall be responsible to the Board. The District, through its engineer, shall supervise construction activity and coordinate all matters pertaining to the completion of the subject project, including permits, easements, material approvals, site inspection, acceptance, payments to the contractor, and field verify the as-built drawings. As-built data shall be provided in a digital format as per District specifications.

6.1.1 Performance Payment and Warranty Bonds

Pursuant to C.R.S., Section 38-26-105 and -106, as amended, performance, payment and warranty bonds equal to the contract price at a minimum shall be furnished to the District by the contractor on all contracts with the District. All main lines, constructed in compliance with the contract specifications and District acceptance procedures, shall be accepted by the District upon completion of construction, subject to a two-year warranty period. Any defective work identified during the warranty period shall be promptly corrected by the contractor, without cost to the District. All daily inspection fees for warranty work required by any governmental authority, including the District, shall be paid by the contractor.

6.1.2 Acceptance Procedures

Before the main lines are accepted by the District, the following procedures shall be completed by the contractor or applicant. The contractor or applicant shall certify the main lines and all appurtenances are free and clear of all liens and encumbrances; furnish to the District a warranty bond to cover all maintenance for two (2) years from the date of construction acceptance of the main lines by the District; provide the District digital field verified as-built drawings of all facilities constructed, including but not limited to easements, water valve locations, fire hydrant locations, water stub out locations, data on storage tanks, data on pumps, coordinates of manholes, rim and invert elevations; provide inspection and test results; provide digital copy of all computer information available as per District specifications; and provide maintenance, operating, and parts manuals. District personnel shall be present for all pressure tests on water main lines plus any other tests as deemed necessary.

6.2 Main Line Extensions by Developers

The District has no obligation to extend any main line. At the discretion of the District, the District may permit an applicant to construct, at the sole expense of the applicant, water main lines prior to their construction by the District. The applicant shall request intent to provide service from the District and subsequently enter into a written main line extension agreement with the District prior to proceeding with any contraction.

6.2.1 Locations of Main Line Extensions

Main lines shall be installed in road or street rights-of-way, as well as in easements granted to the District. Where required main lines must cross land not being subdivided or where such land is under the applicant's control for the granting of public rights-of-way, each applicant who desires service will, in consultation with and with the approval of the District, plat and grant to the District appropriate rights-of-way and easements in which main lines will be constructed.

6.2.2 Sewer Collection Lines

Sewer collection lines shall be designed and constructed to provide a means of access by District personnel using existing District equipment and capability for maintenance, flushing, and inspection. Lift stations are not allowed in District sewer collection systems, except by specific written approval by the District.

6.3 Main Line Project Procedures for Developers

6.3.1 Letter of Intent

During the concept design of a development which requires the construction of water main lines, the developer shall request the respective District to provide a letter expressing the intent to provide service. The developer's request shall include data on the number and type of dwellings, commercial or individual facilities, any irrigation systems, and other activities that would have an impact on water use. The request letter shall contain a description of water rights owned by the developer and a plan indicating the proposed development of the site. The District will analyze its ability to provide water service to the site. This analysis will determine the adequacy of existing distribution system capability and the need to increase the capacity of any existing lines, equipment, or facilities. The analysis will also determine the need to oversize lines in the development site for anticipated future service needs. The District will provide a formal intent to serve the development site and include any conditions deemed appropriate. This letter of intent to serve should be available to the County Planning Commission and an incorporated town planning committee.

6.3.2 Oversizing Main Lines

Based on District estimates of future growth and use of a main line, the applicant shall construct oversized main line extensions as required by the District, at the District's expense for the incremental cost of the oversized line. The District shall

recover the cost of oversizing, including reasonable interest, by connection of future service users or future main line extensions.

6.3.3 **Application for Approval**

All applicants desiring to construct a main line within the District shall submit a formal application to the District. This application shall contain a legal description of the property to be served by the main line, the estimated number of service taps to be served, the type of structures, the use of the property, the easements to be conveyed, the detail construction plans and specifications for that extension, and any other information reasonably required by the District. Within a reasonable time, the District staff and consultants shall review the easements, plans, and specifications for conformance to District, county, and state specifications; submit the recommended plans, with appropriate documentation to the District for overall review, and recommend construction plan approval. If cost recovery is applicable, a Cost Recovery Agreement must be concluded in accordance with Section 6.4, Cost Recovery. Two sets of documents marked "Approved" by the District shall be returned to the applicant. The cost of such review for compliance shall be borne by the applicant.

6.3.4 **Deposits with the District**

Prior to the main line extension approval by the District, the applicant shall deposit with the District an amount sufficient to compensate the District for engineering fees, legal fees, and other costs anticipated to be incurred by the District as a result of the application and the construction of the main line. All reasonable inspection costs conducted by any governmental agency, including the District, shall be paid by applicant.

6.3.5 **Acceptance of Main Lines**

When construction of the main line is completed, the applicant shall notify the District and provide one set of District approved documents, which has been marked to reflect field verified as-built conditions. The District will then inspect the main line, equipment, special structures, and easements for conformance to the approved requirements. Applicants who have completed construction and District inspection of main lines shall, before the main lines are accepted by the District, deed the main lines and appurtenances to the District free and clear of all liens and encumbrances, and furnish to the District a warranty bond for a two-year (2) period from the date of acceptance of the main lines by the District. Prior to the acceptance of the main lines by the District, the applicant shall provide the District with:

1. Legally recorded documents of all easements accompanying the main lines;

2. One set of 24” X 36” printed, field-verified as-built drawings;

3. One disk of spatial data in digital format as specified by District specifications in dwg format;

4. Three (3) sets of all operation, maintenance, and part manuals for all electrical and mechanical equipment provided by the contract; and

5. A certified statement of the costs of the main lines.

No taps may be made onto the main line until construction acceptance has been granted by the District in writing, or by special written permission with the District.

6.4 Cost Recovery

The cost recovery contract policies and procedures of the District for water main extensions are administered individually by the District and are not within the purview of these Rules and Regulations, except as may be set forth in Appendix A, Schedule of Fees and Charges.

Information regarding the opportunity for cost recovery contracts for water main extension within any District may be obtained from the applicable District's administrative offices.

ARTICLE VII
CROSS-CONNECTION CONTROL

7.1 Cross-Connection Control Authority

The authority to implement and maintain this backflow and on cross-connection control program is contained in the following legislative actions:

7.1.1 Colorado Revised Statutes (CRS), Section 25-1-114 and 25-1-114.1.

7.1.2 Colorado Primary Drinking Water Regulations (CPDWR), Article 12, Control of Hazardous Cross-Connections.

7.1.3 Cross-Connection Control Manual, Colorado Department of Public Health and Environment, latest edition. The District's program is based on this manual and shall be utilized to determine compliance, for repairs, installations, and testing of backflow prevention devices.

7.1.4 Occupational Safety and Health Administration (OSHA).

7.1.5 Two Rivers Metropolitan District Rules and Regulations.

7.1.6 Colorado Plumbing Code.

7.1.7 Uniform Plumbing Code of the International Plumbing and Mechanical Officials / International Plumbing Code.

7.1.8 Uniform Swimming Pool and Mineral Bath Regulations.

7.1.9 Uniform Solar Code.

7.2 Reference Manuals Adopted for Guidelines on Cross-Connection Control

7.2.1 Cross-Connection Control Manual, Colorado Department of Public Health and Environment, latest edition.

7.2.2 Definitions of terms used in this regulation are contained in the Cross-Connection Control Manual, Colorado Department of Public Health and Environment, latest edition.

7.3 **General Requirements**

All building plans must be submitted to the local plumbing official and approved prior to issuance of water service. Building plans must show:

7.3.1 Approved backflow prevention assemblies shall be installed on all commercial, industrial, mixed usage, and fire sprinkler systems to protect the domestic water system from potential cross connection contamination.

7.3.2 Approved backflow prevention assemblies shall be installed on any service connection that serves three or more residential units.

7.3.3 Approved backflow prevention assemblies that provide containment shall be installed on all new service connections, and shall be located downstream from the meter, prior to any other connection.

7.3.4 The District requires that all building plans for new construction or remodels that involve plumbing be submitted to the District for review and approval prior to construction.

7.3.5 All backflow devices as described in numbers 1 and 2 shall be tested at the time of installation and annually thereafter. Test results must be submitted to the District on the District's form and all information on the form must be completed and legible. Testing of devices must be performed by a Certified Cross Connection Control Technician, with a current and valid certification.

7.3.6 All assemblies used within the District must conform to the latest edition of the Colorado Cross Connection Control Manual.

7.3.7 Backflow devices installed on fire sprinkler systems must meet the requirements of the local Fire Department and shall be Reduced Pressure Assemblies when the system contains glycol. The reduction of pressure through these devices must be incorporated into the design of the fire sprinkler system.

7.3.8 Backflow prevention assemblies shall only be installed by a Master Plumber or by a licensed plumber or Cross Connection Control Technician working directly under the supervision and authority of a Licensed Master Plumber. Double check type backflow prevention assemblies shall not be permitted on systems containing glycol.

7.3.9 Single Check Valves are not considered backflow prevention devices and shall not be permitted within the service area of the District.

7.3.10 THE DISTRICT reserves the right to require the installation, replacement, or modification of any backflow assembly that the District's Cross Connection Technician deems to present a potential hazard to the domestic water system.

7.3.11 Backflow prevention valves are not to be used as the inlet or outlet valve of the water meter. Test cocks are not to be used as supply connections.

7.3.12 All costs for the design, installation, maintenance, repair, and testing of backflow prevention devices shall be borne by the customer.

7.3.13 THE DISTRICT shall have the right of entry to inspect any and all buildings and premises for cross connections relative to possible hazards, or to verify proper installation, testing, or repair of backflow device assemblies.

7.3.14 No grandfather clause exists. All Rules, Regulations, and Laws apply regardless of the age of the facility or the service connection.

7.3.15 THE DISTRICT may discontinue service of water, if an unprotected cross connection exists on the premises that pose a significant risk to the domestic water system. Failure of a customer to cooperate after proper notice in writing by the District, pertaining to the installation, maintenance, testing, repair, relocation, or inspection of a backflow prevention assembly may result in the discontinuance of water service. A service connection may be left in service if the customer installs an approved air gap separation from the public water system. If a service is disconnecting, it shall not be restored until such time as THE DISTRICT inspects and approved the backflow prevention devices. If discontinuance of a water service poses a significant risk to public safety (meaning a physical cross connection has been verified between a non-potable source or hazardous source and the potable water system) the District has the authority to fine commercial customers an amount not to exceed $500 per day for each day the connection is out of compliance (meaning from the time the customer was notified of being out of compliance, and once the time frame requiring the repair has expired) posing a significant risk to the public water system.

ARTICLE VIII
RATES AND CHARGES

8.1 General

The information contained in this Article is pertinent to all charges of whatever nature to be levied for the provision of water services. The rates and charges as established in Appendix A are in effect at this time, and shall remain in effect until modified by the District Board of Directors under the provisions of these Rules and Regulations, and under the applicable statutes of the State of Colorado. Nothing contained herein shall limit the District from modifying rates and charges, or from modifying any classification.

8.2 Application of this Article

The rates, charges, and other information apply to customers inside the District, and shall not obligate the District with respect to services provided outside the District boundaries.

8.3 Standards of Consumption

For the purpose of levying fair, reasonable, uniform, and equitable charges, the classifications and related definitions are as defined in Article II, Definitions. The following additional conditions are used in rate and service charge applications.

8.4 Classification of Customers

For the purpose of levying fair, reasonable, uniform, and equitable charges, the classifications and related definitions are as defined in Article II, Definitions. The following additional conditions are used in rate and service charge applications.

8.4.1 Prepaid Tap Fees

Tap fees may be paid and tap fee applications issued anytime in advance of connection, in which case the commencement of service charges shall be governed by Section 4.5.2, Turn-On/Turn-Off of Service. No refund of tap fees will be paid.

8.4.2 Factors and Usage

The fees and charges reflected in Appendix A for the District are based upon recovery of cost requirements, factors of usage and physical conditions of plant and line structure.

8.4.3 Disputed Tap Application

If a dispute arises between the District and the applicant regarding the calculation of tap fees or the nature and use of the structure as it applies to Appendix A, the

dispute will be settled in accordance with Article XI, Hearing and Appeal Procedures.

8.5 Transfer of Tap Fees

Any approval of a request for a transfer of a tap or fees shall be in the sole discretion of the District. No tap fee paid on behalf of one property, or any portion thereof, may be transferred to any other property except under the following conditions:

1. The owner requesting the transfer is the common owner of the property for which the tap fee has been paid and the property to which the transfer of the tap fee, or portion thereof, is being requested. Both properties must be in the District.

2. The owner requesting the transfer has no outstanding unpaid accounts with the District and has previously maintained good credit with the District.

3. The property to which the tap fee initially applied has never been connected to the District's system.

4. The owner requesting the transfer shall pay to the District the difference between the tap fee which would be charged on the date the transfer is requested for the property to which transfer is being sought, and the tap fee previously paid. In no event shall the District make a credit or refund. In the event an owner transfers only a portion of the total sum previously paid as a tap fee, the owner shall retain a credit for any non-transferred portion of the previously paid fee.

8.6 Service Charge

Service charges shall be as reflected in the Schedule of Fees and Charges, Appendix A. Service charges will begin when water service is turned on to the building.

Monthly service charges shall be suspended during any month(s) in which service through a newly constructed tap to a building prior to its occupancy has been turned off in accordance with Section 4.5.2, Turn-On/Turn-Off of Service.

8.7 Amended Tap Fees

In those situations where a prospective user applies for a permit for service to a structure or use not defined in Section 7.4, Classification of Customers; or where, in the District's opinion, the structure represents a classification not contemplated in the establishment of the previously defined tap fee, the District shall establish a fair, reasonable, and equitable tap fee for the property.

8.8 Amended Service Charges

In those situations where, in the General Manager's sole discretion, the service charges shown in Appendix A do not represent a fair, reasonable, and equitable charge for the intended use, the General Manager may adjust the rates.

8.9 Payment of Service Charges

The policy of the District is to bill water service charges on a monthly basis.

When a condominium or homeowners' association exists for a number of units receiving service from the District, the association shall receive one invoice per meter. The District will not bill individual owners within a multi-unit project without separate meters, curb stops, shut-off valves, and services lines. The District shall have the right to issue only one bill for a multi-unit structure or development. Any structure serviced by a single service line with more than one Residential Unit which are not separately metered, shall establish one responsible party for water bills.

The customer shall pay to the District within fifteen (15) days after the billing date the full amount of that statement. If the customer believes the billing statement is in error, the customer must file, in writing, a notice to the District of the presumed error, and request a clarification from the District. Upon review by the District and resubmittal and/or revision of the statement, payment shall be due no later than fifteen (15) days from the billing date of the resubmitted statement.

8.10 Penalty for Late Payment

Any time a customer is twenty-five (25) days delinquent in payment of any charges due the District, the District shall assess an interest charge at the maximum rate allowed by statute on the unpaid balance. The District shall further have the right, in its sole discretion, to terminate service to any customer who becomes thirty (30) days or more delinquent in payment for scheduled services; termination of service will follow the opportunity for a hearing as outlined in Article IX, Hearing and Appeal Procedures.

The District shall assess to any customer who is late in payment of his account, all legal, court, disconnection, and other costs necessary to or incidental to the collection of the account.

Until paid, all such fees, rates, penalties, or charges shall constitute a perpetual lien on the property served. Any such lien may be foreclosed in the same manner as provided by the laws of Colorado for the foreclosure of mechanics' liens.

8.11 Foreclosure Proceedings/Attorney's Fees

After other efforts (letters, posted notices) to collect delinquent payments of any fee or charge imposed by the District under these Rules and Regulations and/or Colorado law

are exhausted, the District may initiate foreclosure proceedings as provided for by C.R.S., Section 32-1-1001(l)(j), as amended. In the event the District shall commence a foreclosure proceeding to collect any payments due and payable to the District, the party being foreclosed shall be charged all costs incurred in connection with the foreclosure proceedings including, but not limited to, reasonable attorney's fees which the court shall tax as a part of the costs of the proceedings. In the event payment is made by the customer prior to the foreclosure sale, the attorney's fees and all other fees outstanding against the account and relating to the subject property, must be paid as a precondition to the resumption of service to the property.

8.12 Certification of Amounts to County Treasurer

In addition to any other means of collecting delinquent fees, rates, tolls, penalties, charges, or assessments made or levied solely for water or water services (including charges for availability of such service), the District may certify the delinquent amounts the County Treasurer for collection in the same manner as property taxes, in accordance with the provisions of statute C.R.S., 32-1-1101(e), as amended. The District and County Treasurer shall charge a fee for the administrative costs of this collection method. This fee shall be added to all delinquent amounts, including other penalties and interest charges, before certification.

ARTICLE IX
HEARING AND APPEAL PROCEDURES

9.1 Application

The hearing and appeal procedures established by this Article shall apply to all complaints concerning the interpretation, application, or enforcement of the Rules and Regulations of the District, and contracts related thereto, as they now exist or may hereafter be amended. The hearing and appeal procedures established by this Article shall not apply to the following complaints:

1. Complaints, which arise with, regard to personnel matters. These complaints shall be governed exclusively by the District's personnel rules.

2. Any other complaint which does not concern the interpretation, application, or enforcement of the Rules and Regulations of the District, or contracts related thereto.

9.2 Initial Complaint Resolution

Complaints concerning the interpretation, application, or enforcement of Rules and Regulations of the District must be presented to the General Manager, or his designated representative. Upon receipt of a complaint, the General Manager or his representative shall make a full and complete review of the allegations contained in the complaint, and shall take such action and/or make such determination as may be warranted. The complainant shall be notified of the action or determination by mail within twenty (20) days after receipt of the complaint.

9.3 Hearing

In the event the decision of the General Manager or his representative is deemed unsatisfactory by the complainant, a written request for hearing may be submitted to the Board of Directors within twenty (20) days from the date written notice of the decision was mailed.

If receipt of the request is timely and if all other prerequisites prescribed by these Rules and Regulations have been met, the Board of Directors or an appointed hearing officer shall conduct a hearing at the District's convenience. Every effort will be made to conduct the hearing within twenty (20) days after the receipt of the request. The hearing shall be conducted in accordance with and subject to all pertinent provisions of these Rules and Regulations.

9.4 Conduct of Hearing

At the hearing, the Board of Directors or appointed hearing officer shall preside. The complainant and representatives of the District shall be permitted to appear in person, and the complainant may be represented by any person of his choice, including legal counsel.

The complainant or his representatives and the District representatives shall have the right to present evidence and arguments; the right to cross-examine any person; and the right to oppose any testimony or statement that may be relied upon in support of or in opposition to the matter complained. The Board of Directors or hearing officer may receive and consider any evidence, which has probative value commonly, accepted by reasonable and prudent persons in the conduct of their affairs. The Board of Directors or hearing officer may ask questions of any representative in order to clarify further an issue relevant to the complaint.

The Board of Directors or hearing officer shall determine whether clear and convincing grounds exist to alter, amend, defer, or cancel the interpretation, application, and/or enforcement of the Rules and Regulations that are the subject of the complaint. The decision shall be based upon evidence presented at the hearing. The burden of showing that the required grounds exist to alter, amend, defer, or cancel the action shall be upon the complainant.

9.5 Findings

Subsequent to the hearing, the Board of Directors or hearing officer shall make written findings and an order disposing of the matter and shall mail the findings and order to the complainant not later than ten (10) days after the date of the hearing.

9.6 Appeals to the Board of Directors

In the event the complainant disagrees with the findings and order of the General Manager or hearing officer, the complainant may, within twenty (20) days from the date of mailing of the findings and order, file with the District a written request for an appeal to the Board. The request for an appeal shall set forth, with specificity, the facts or exhibits presented at the hearing upon which the complainant relies and shall contain a brief statement of the complainant's reasons for the appeal. In response, the General Manager or hearing officer shall compile a written record of the hearing consisting of:

1. Minutes of the hearing;

2. All exhibits or other physical evidence offered and reviewed at the hearing; and

3. A copy of the written findings and order.

The General Manager or hearing officer may submit additional written comments that further clarify the hearing findings and order in response to the request for appeal.

The Board shall consider the complainant's written request for appeal and the written record of the hearing at the next regularly scheduled meeting held not earlier than ten (10) days after the filing of the complainant's request for appeal. Such consideration shall be limited exclusively to a review of the record of the hearing, any written clarifying comments by the General Manager or hearing officer, and the complainant's written request for appeal. No further evidence shall be presented by any party to the appeal and there shall not be the right to a hearing de novo before the Board of Directors.

9.7 **Board's Findings**

The Board shall make written findings and issue an Order concerning the disposition of the appeal. A notice of the decision shall be sent by mail to the complainant within ten (10) days after the appeal hearing. The Board of Directors' findings shall be final.

9.8 **Notice**

A complainant shall be given notice of any hearing before the General Manager, the hearing officer, or before the Board, by mail at least ten (10) calendar days prior to the date of the hearing, unless the complainant requests or agrees to a hearing in less time, or to a waiver of formal notice. Notice is deemed given when placed in regular, postage prepaid U.S. mail.

APPENDIX A
TWO RIVERS METROPOLITAN DISTRICT
SCHEDULE OF FEES AND CHARGES
EFFECTIVE: JANUARY 1, 2007

1. Residential Usage

Single Family Equivalent Unit (SFE) for Service Billing:

A single-family equivalent unit (SFE) is any primary dwelling unit up to 3,000 square feet of floor area. Floor area is calculated on the gross square foot measurement to include the outside walls, unfinished areas, mechanical rooms, and basements over five (5) feet high, excluding garages, attics and, in a multi-unit or mixed-use facility, circulation space. Square footage over 3,000 will result in an incremental increase in monthly service fees. Any secondary dwelling unit up to 1,500 square feet shall be equivalent to ½ SFE. A primary dwelling unit is the first or main dwelling unit on a property and the secondary unit is the second or non-primary dwelling unit on a property.

Water Tap Fee Calculation

Primary Dwelling Unit:

$5,000 per unit up to 3,000 square feet, plus $3.00 per square foot thereafter. Area is calculated on the gross residential floor area, plus unfinished areas, excluding garages, and multi-unit common spaces. Property owner shall be required to obtain a letter from an Architect or Engineer certifying the size of the building using the District's definition of square footage (minimum $5,000).

Sewer Tap Fee Calculation

Primary Dwelling Unit:

$5,000 per unit up to 3,000 square feet, plus $3.00 per square foot thereafter. Area is calculated on the gross residential floor area, plus unfurnished areas, excluding garages, and multi-unit common spaces. Property owner shall be required to obtain a letter from an Architect or Engineer certifying the size of the building using the District's definition of square footage (minimum $5,000).

2. Commercial Usage

Water Tap Fee Calculation

Commercial water tap fees are based on the meter size for the unit and are as determined by Table A-1 below:

Table A-1

Meter Size	¾" **1.5 SFE**	1" **2.6 SFE**	1-1/2" **5.8 SFE**	2" **10.3 SFE**	3" **23.0 SFE**	4" **40.9 SFE**	6" **92.1 SFE**
Tap Fee	$7,472	$12,951	$28,894	$51,312	$114,577	$203,748	$458,803

Sewer Tap Fee Calculation

Commercial sewer tap fees are based on the meter size of the unit and are as determined by Table A-2 below:

Table A-2

Meter Size	¾" **1.5 SFE**	1" **2.6 SFE**	1-1/2" **5.8 SFE**	2" **10.3 SFE**	3" **23.0 SFE**	4" **40.9 SFE**	6" **92.1 SFE**
Tap Fee	$10,488	$18,179	$40,554	$72,019	$160,818	$285,977	$643,972

3. Water Service Charges

Water service charges are billed in advance; water overage charges are billed in arrears.

- Tier 1 – Up to 15,000 gallons per month per SFE (Single Family Equivalent residence which is defined as 3,000 square feet of living area) will be billed at a minimum charge of $53 up to 15,000 gallons. This minimum amount is subject to increase with inflation.
- Tier 2 – 15,001-30,000 gallons will be charged at a rate of $2.50 per thousand gallons.
- Tier 3 –30,000 gallons and above will be charged at a rate of $3.75 per thousand gallons.

Two Rivers Metro District reserves the right to evaluate the tiered rates on an annual basis.

4. Sewer Service Charges

Are billed in advance.

Residential Occupancy

Charge per one (1) EQR	$40.00
Charge per ea. additional 0.1 EQR	$ 4.00

Commercial Occupancies

Charge per one (1) EQR	$50.00
Charge per ea. additional 0.1 EQR	$ 5.00

RULES AND REGULATIONS
FOR
WATER AND WASTEWATER SERVICE
AT
TWO RIVERS METRO DISTRICT

APPENDIX B

WATER AND WASTEWATER SERVICE
CONSTRUCTION SPECIFICATIONS

TABLE OF CONTENTS

SECTION I – GENERAL 1

1.1 Authority 1
1.1.1 Effective Date of Specifications 1
1.1.2 Revisions, Reference, Amendments, or Additions 1
1.1.3 Definitions 1
1.2 Development Approval and Infrastructure Acceptance 1
1.3 Variance 1
1.4 Purpose 2
1.5 Authorization to Connect 2
1.6 Services and Meters 2
1.7 Scheduling Inspections 3
1.8 Joint Service Lines 3
1.9 Stub Outs 3

SECTION II – WATER SERVICES 4

2.1 Materials 4
2.1.1 General Requirements 4
2.1.2 Copper Tubing 4
2.1.3 Polyethylene Tubing (PE) 4
2.1.4 Ductile Iron Pipe (DIP) 4
2.1.5 Corporation Stops 4
2.1.6 Curb Stops 5
2.1.7 Curb Boxes 5
2.1.8 Saddles 5
2.2 Service Line Design 5
2.3 Separation of Services 5
2.3.1 Horizontal Separation Required 5
2.3.2 Horizontal Separation Exception 6
2.3.3 Vertical Separation Required- Sewer under Water 6
2.3.4 Vertical Separation Exception- Water under Sewer 7
2.4 Depth of Bury 7
2.4.1 Service Insulation Requirements 7
2.5 Bedding Material 7
2.6 Underground Warning Tape 8
2.7 Tracer Wire 8
2.8 Curb Stop Location 8
2.9 Fire System Services 8
2.10 Connections, Testing and Requirements for Inspection 8
2.10.1 Water Service Connections 8
2.10.2 Water Service Testing 9
2.10.3 Water Service Requirements for Inspection 9
2.11 Water Service Line Abandonment 10
2.12 Meter Assemblies 10

2.12.1 Pressure Reducing Valve (Domestic) 10
2.12.2 Pressure Reducing Valve (Fire Suppression System) 10
2.12.3 Shutoff Valves 10
2.12.4 Backflow Prevention Devices 11
2.12.5 Water Meter 11
2.12.6 Bypass Piping on Commercial Meters 12
2.13 Stop and Waste Valves 12
2.14 Meter Pits 12
2.14.1 Manhole Bases 12
2.14.2 Manhole Sections 12
2.14.3 Manhole Rings and Covers 12
2.14.4 Manhole Steps 12
2.14.5 Manhole Joint Sealant 13
2.15 Repair Couplings 13

SECTION III – WASTEWATER SERVICES 14

3.1 Materials 14
3.1.1 Polyvinyl Chloride (PVC) non-pressure 14
3.1.2 Polyvinyl Chloride (PVC) pressure: 14
3.1.3 Ductile Iron: 14
3.2 Service Line Design 14
3.3 Separation of Services 15
3.4 Depth of Bury 15
3.5 Bedding Material 15
3.6 Underground Warning Tape 15
3.7 Tracer Wire 15
3.8 Connections, and Requirements for Inspection 16
3.8.1 Wastewater Service Connections 16
3.8.2 Wastewater Service Requirements for Inspection 16
3.9 Stub Out Abandonment 16
3.10 Reuse of Existing Sewer Service Line 18
3.11 Repair Couplings 18
3.12 Prohibited Discharges 18

SECTION IV -STANDARD SERVICE LINE FORMS & DETAILS 19

FORM B1: REQUIREMENTS CHECKLIST FOR NEW SERVICE LINE INSPECTION 19
B-01: WATER SERVICE STUB OUT WITH MAINLINE TRACER WIRE 19
B-02: WATER SERVICE STUB OUT WITHOUT MAINLINE TRACER WIRE 19
B-03: SERVICE LINE TAPPING WITH MAINLINE TRACER WIRE 19
B-04: SERVICE LINE TAPPING WITHOUT MAINLINE TRACER WIRE 19
B-05: METER ASSEMBLY DIAGRAM 19
B-06: SERVICE LINE METER VAULT 19
B-07: SERVICE LINE METER VAULT – TEMPORARY CONSTRUCTION OR IRRIGATION 19
B-08: SEWER SERVICE CONNECTION 19
B-09: 2” OR SMALLER WATER SERVICE LINE WITH MAINLINE TRACER WIRE 19
B- 0: 2” OR SMALLER WATER SERVICE LINE WITHOUT MAINLINE TRACER WIRE 19

SECTION I – GENERAL

B.1 Authority

The Standard Specifications for Water and Wastewater Service Construction as set forth herein ("Specifications") are promulgated by the Two Rivers Metro District ("District"). The interpretation and enforcement of said Specifications is hereby delegated to the Regulations Administrator of the Two Rivers Metro District.

B.1.1 Effective Date of Specifications

The Specifications shall become effective immediately upon formal adoption by the District and shall supersede all former specifications for water main construction. The most current version of these Specifications is available at https://tworivershoa.com/metro-district/

B.1.2 Revisions, Reference, Amendments, or Additions

The Specifications may be revised and/or amended. Such revisions, amendments, and additions shall be binding and in full force immediately upon formal adoption by the District.

The latest edition of the International Plumbing Code (IPC) is incorporated herein by reference. In cases where conflicts arise between these Specifications and IPC, the more stringent shall prevail.

B.1.3 Definitions

Please reference the Rules and Regulations for Water and Wastewater Service, Article II.

B.2 Development Approval and Infrastructure Acceptance

Please reference the Rules and Regulations for Water and Wastewater Service, Articles VIII and IX, respectively.

B.3 Variance

The District recognizes that the strict and literal interpretation of these Rules and Regulations may not be possible in all cases. Please refer to Article VII for information on the Variance process.

B.4 Purpose

These Water and Wastewater Service Construction Specifications are intended to insure that the Services extended from the Water System and Wastewater System is constructed so as to not adversely impact the Water System or Wastewater System. The extent of Water Service and Wastewater Service is as defined in the Rules and Regulations, Article II, 2.122 and 2.117, respectively.

B.5 Authorization to Connect

This Appendix provides construction specifications, including testing and inspection requirements related to Services, but does not include all of the requirements for Connection to the Water and/or Wastewater Systems. Customers intending to make a Connection must contact the District prior to any construction or work on the Water Service or Wastewater Service so that all requirements for Connection can be determined. A complete description of the requirements for Connection can be found in these Rules and Regulations, refer to Article IV, Authorization to Connect to Water and Wastewater Systems.

Customers must submit a completed Connection Application (available at https://tworivershoa.com/metro-district/), a completed service line and meter sizing form and a site plan outlining the following items for both water and wastewater service lines.

- Pipe Materials
- Pipe Sizes
- Depths of Bury
- Utility crossings identified and mitigated by proper separation or by secondary containment.
- Tracer wire installation plan as outlined in Appendix E.

Water service lines must be sized appropriately, and velocities for maximum domestic use must be under 10fps. Under no circumstance may the water service line from the water main to the meter be sized smaller than the meter.

B.6 Services and Meters

Each separately metered unit shall have a separate and independent Water and Wastewater Service Connection to the Main. Along with the Connection Application, The customer shall submit a schematic/diagram for the mechanical room or location where the meter assembly for domestic use, irrigation use and the fire suppression system are to be installed. This diagram should demonstrate conformance to the Rules and Regulations Detail B-05. Meter Size and type are determined by the District after submittal of meter sizing form.

B.7 Scheduling Inspections

The Customer shall notify the District when the Water or Wastewater Service is ready for inspection or Connection to the Water or Wastewater Main. Appointments for inspections, testing, Connection, meter inspection, Turn-On, Turn-Off or operation of Water Main valves must be scheduled with the District a minimum of two (2) business days in advance.

B.8 Joint Service Lines

Joint water or wastewater service lines are prohibited.

B.9 Stub Outs

Stub outs are for the benefit of the property and are not guaranteed to exist; the location and depth may or may not be known. If a stub out is not in compliance with current Rules and Regulations, the Customer shall be responsible for modifying/replacing the stub out to meet current specifications.

2.1 Materials

2.1.1 General Requirements

The District follows, and all water service construction shall conform to, the CDPHE lead-free policy. The joining of dissimilar metals in water service lines is prohibited.

2.1.2 Copper Tubing

Copper Water Services shall be 1", 1.5" or 2" diameter seamless Type K copper tubing in accordance with ASTM B88. Connections shall be compression in accordance with ANSI/AWWA C800 or silver soldered conforming to AMS 4773C. All shall be certified to comply with NSF/ANSI 61, NSF/ANSI 61 Annex G, and NSF/ANSI 372. No lead solder joints shall be allowed. All copper service lines must use full lengths of tubing (i.e. 100' for 1", 60' for 1.5" and 40' for 2") before a splice can be installed.

Installed Type K copper tubing shall be free of kinks, indentations, and damaged areas. Any damaged copper tubing or fittings may be rejected by the District Inspector.

An appropriate size gooseneck shall be made in the Water Service at the corporation valve to prevent the Service from being pulled from the Water Main during backfill and compaction operations.

2.1.3 Polyethylene Tubing (PE)

Polyethylene tubing used for water services shall meet the requirements of AWWA C901, shall be PE4710 high density resin material and conform to ASTM 2737 standards listed for water service pipe in the latest edition of the IPC. All joints shall be brass compression grip ring type with stainless steel inserts or fused. Polyethylene tubing shall have a pressure rating of 250 psi. All polyethylene service lines must use full lengths of tubing (i.e. 300' for 1", 250' for 1.5" and 200' for 2") before a splice can be installed. Pipe dimensions shall meet Copper Tubing Size (CTS) standards.

2.1.4 Ductile Iron Pipe (DIP)

Water services greater than or equal to four (4) inches in diameter are to be constructed of ductile iron pipe, AWWA Class 52, with a pressure rating of 350 psi. Services to be constructed of ductile iron pipe must be designed by a licensed engineer and construction plans must be submitted to the District for approval.

2.1.5 Corporation Stops

Corporation stops shall be constructed of all brass construction with threaded taper or IP thread inlet and grip compression connection out in accordance with ANSI/AWWA

C800 and conform to ASTM B584, UNS C89833 (latest revision). Corporation stops shall be Mueller 300 Ball Type Corporation Valve, Catalog Number B-25008N or B25028N or approved equal.

2.1.6 Curb Stops

Curb stops shall be of all brass construction with compression connections for inlet and outlet in accordance with ANSI/AWWA C800 and conform to ASTM B584, UNS C89833 (latest revision). Curb stops shall be Mueller 300 Ball Curb Valve No. B25209N, or approved equal. For service lines buried at a depth greater than nine and a half (9.5) feet, an extension rod must be placed on the curb stop.

2.1.7 Curb Boxes

Curb boxes shall be cast iron in accordance with ASTM A 48, Class 35B. For curb stops up to 1", curb boxes shall be Mueller H10314 with 89982 lid and stationary rod, part number 828- series, depending on final bury depth. For curb stops larger than 1", the curb boxes shall be Mueller H10336 with 89982 lid.

2.1.8 Saddles

Tapping saddles shall be Mueller BR2S or BR2W, AWWA C800, brass body, 200 psi maximum working pressure, double strap design, with optional 304L stainless steel straps.

2.2 Service Line Design

The alignment of the Water Service shall take the shortest, most direct route from the Water Main to the Water Meter.

2.3 Separation of Services

2.3.1 Horizontal Separation Required

A horizontal separation of ten (10) feet must be maintained between parallel Water and Wastewater Services. Water and Wastewater Services shall not cross.

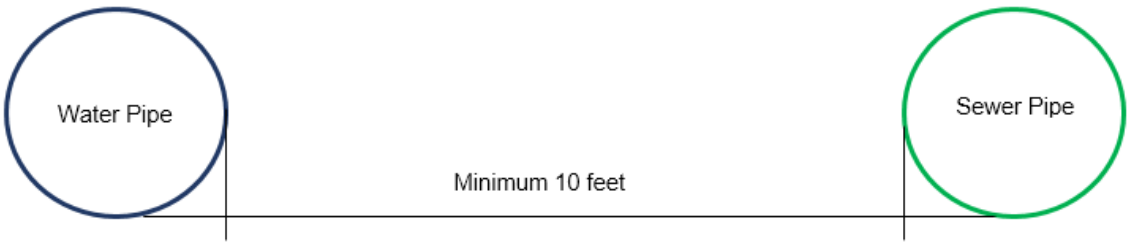

2.3.2 Horizontal Separation Exception

In cases where it is not practical to maintain a ten foot (10') separation, the District may allow installation of the sewer pipe closer to a water pipe utilizing encasement or pressure rated joints, provided that the water pipe is on a separate trench or on an undisturbed earth shelf located on one side of the pipe and at an elevation so the bottom of the water pipe is at least eighteen inches (18') above the top of the sewer pipe.

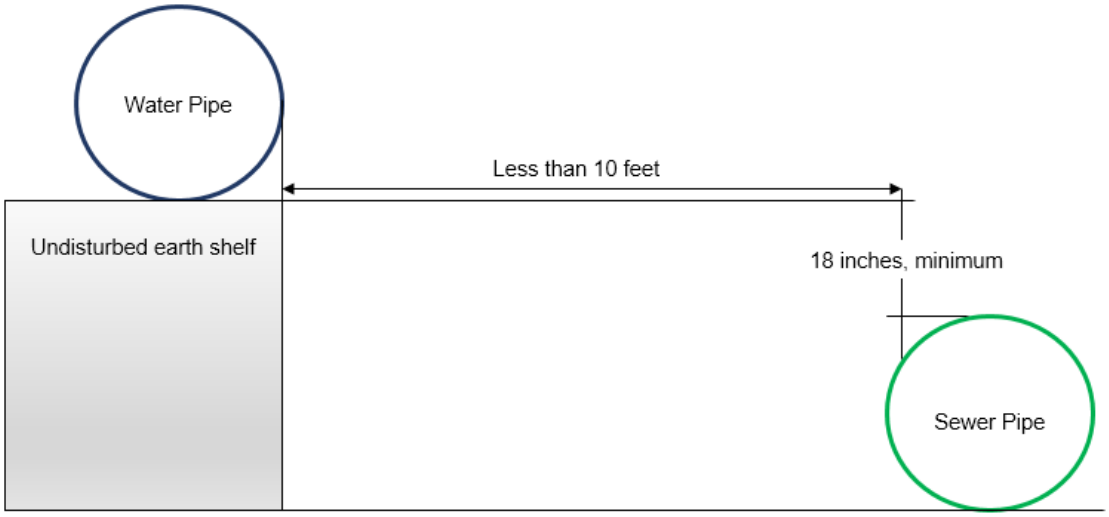

2.3.3 Vertical Separation Required- Sewer under Water

If the sewer service crosses under a water main but less than eighteen inches (18") of clear space will exist, the sewer service must be installed with secondary containment. Acceptable options include a pipe casing, concrete, or Controlled Low Strength Material (ex. Flowable fill) extending ten feet each side of the crossing. Crossings involving joint less pipe such as HDPE or copper do not require installation of secondary containment.

2.3.4 Vertical Separation Exception- Water under Sewer

If the sewer service must cross above or over a water main, the sewer service shall be installed with secondary containment unless the vertical distance exceeds five feet (5'). Acceptable options include a pipe casing, concrete, or Controlled Low Strength Material (ex. Flowable fill) extending ten feet each side of the crossing. Crossings involving joint less pipe such as HDPE or copper do not require installation of secondary containment.

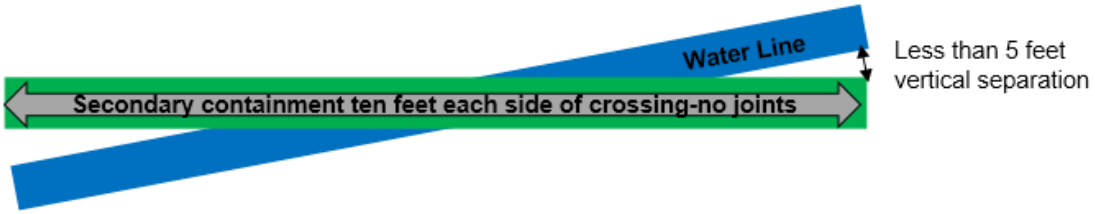

2.4 Depth of Bury

Water Services shall be buried a minimum of seven (7) feet and a maximum of nine and a half (9.5) feet below the ground surface.

2.4.1 Service Insulation Requirements

For every foot of cover that is out of compliance with minimum cover requirements for mains, the District shall require the installation of 1-inch of insulation board, minimum 2" insulation required. Insulation will be in accordance with ASTM C578-Type V Standard Specification for Rigid Cellular Polystyrene Thermal Insulation. Compressive Strength will be 100 psi minimum per ASTM D1621. Water Absorption, ASTM C272, 03% by volume, maximum. DOW STYROFOAM™ HIGHLOAD 100, OWENS CORNING FOAMULAR 1000 or approved equal. In addition to maintaining cover from the ground surface, specified cover is required from storm sewer crossings and other cold air sources. See Insulation detail C-14 in Appendix C.

2.5 Bedding Material

Bedding material shall consist of uniformly graded granular material, 3/8-inch or ¾-inch minus screened rock material, installed six (6) inches below and twelve (12) inches above the Service pipe. Refer to Appendix E.

2.6 Underground Warning Tape

Underground warning tape shall be installed twenty-four inches (24”) above all buried portions of the Water Service. The tape shall meet the following requirements:

(a) Four (4) mil thick Polyethylene tape
(b) Solid blue color with black lettering
(c) Six (6) inches in width

2.7 Tracer Wire

See Appendix E.

2.8 Curb Stop Location

The Curb Stop shall be located a maximum of one (1) foot within the property line or edge of easement, and shall be easily accessible to District personnel. Refer to curb stop detail B-01 and B-02 for services less than or equal to 2” and B-03 and B-04 for services greater than or equal to 4”.

2.9 Fire System Services

Commercial Water Service connections for fire suppression systems shall be as required by the local fire authority. Residential connection of the fire suppression system to the Water Service shall occur downstream from the Curb Stop valve and upstream of the meter. Refer to Detail B-05.

2.10 Connections, Testing and Requirements for Inspection

2.10.1 Water Service Connections

Service Lines smaller than four inches (4”):

All Water Service connections of 1", 1.5”- and 2-inch diameter shall be made only by District personnel using a tapping saddle fitting on existing mains.

Service lines four inches (4”) or larger in diameter:

Water Service Connections 4 inch (4”) in diameter or greater shall be made by a qualified contractor on behalf of the Customer and witnessed and inspected by a District Inspector. For all connections 4" in diameter and larger, a tee shall be installed on the main or a wet tap may be made using a tapping sleeve with prior approval from the District. The tapping sleeve shall be stainless steel Mueller H304 (250 psi working pressure) or approved equivalent. The use of a tapping sleeve shall meet the following conditions:

(a) Tapping sleeve must be approved by the District prior to installation, and may only be installed by an approved contractor

(b) System working pressures shall not exceed the tapping sleeve's rated working pressure

(c) Tapping sleeves shall not be permitted for service lines with a diameter that is larger than or equal to one-half (½) the diameter of the main being tapped.

(d) Tapping sleeves shall not be permitted for service connections larger than 6" in diameter. A tee shall be installed on the Water Main.

2.10.2 Water Service Testing

Service Lines smaller than four inches (4"):

No disinfection is required on service lines smaller than 4". Hydrostatic testing of the service line shall use system pressure. The contractor shall backfill the trench at their own risk. Pressure is held for a minimum of two hours and will be accepted if no leaks are measured or observed. If the test fails, the service line will need to be repaired or replaced. In winter conditions, compressed air may be used for testing at the discretion of the District Inspector.

Service lines four inches (4") or larger in diameter:

The District Inspector will perform high chlorine, low chlorine, bacteriologic, and hydrostatic testing on the Service, similar to a water main. Details of the testing procedures can be found in Appendix C, Section 5. Customer shall provide a minimum of two days advance notice to schedule testing. The testing process typically requires a minimum five day duration before water service can be turned on. Failure to pass these tests will result in the Customer flushing the Service and the District retesting the Service.

2.10.3 Water Service Requirements for Inspection

No Services shall be covered with bedding material or backfill without the District Inspector's approval. All portions of the Water Service must be visible to the District Inspector for an inspection to be completed.

District personnel must attend all underground Fire Protection Service flush tests in order to operate Curb Stop valves. The District shall be notified a minimum of two business days prior to testing.

Customers requesting Connections after November 15 and before April 15 must provide heating, adequate to prevent freezing of water, in the Connecting area.

2.11 Water Service Line Abandonment

For abandonment of two (2) inch and smaller water service lines or stub outs, the corporation stop must be shut off at the water main and the line disconnected. For abandonment of four (4) inch or larger water service lines or stub outs, a mainline shutdown must be coordinated, the curb stop valve and lateral will be removed, and a megalug cap on the main line tee.

2.12 Meter Assemblies

The following criteria dictate the design and installation of commercial and residential meter assemblies. A meter assembly consists of a pressure reducing valve, shutoff valves, backflow prevention device, water meter, and related appurtenances. All meter assemblies shall be design and constructed per most recently adopted plumbing codes. Please refer to Detail B-05 for a schematic of the approved meter assemblies.

2.12.1 Pressure Reducing Valve (Domestic)

A pressure-reducing valve (PRV) shall be installed on all Water Services upstream of the water meter, ensuring that the water meter and the building plumbing system are protected from fluctuating water system pressures. Water Service will not be turned on until the meter assembly including the PRV is installed. The pressure setting of the PRV shall not exceed 100 psi without written permission from the District. Customers are responsible for ownership, maintenance and operation of Pressure Reducing Valves. The district recommends periodic inspection and maintenance per the manufacturer's recommendations.

2.12.2 Pressure Reducing Valve (Fire Suppression System)

A pressure-reducing valve (PRV) shall be installed on all fire sprinkler systems to ensure that they are protected from fluctuating water main pressures. The pressure setting of the PRV shall not exceed 200 psi without written permission from the District. Customers are responsible for ownership, maintenance and operation of Pressure Reducing Valves. The district recommends periodic inspection and maintenance per the manufacturer's recommendations.

2.12.3 Shutoff Valves

A shut-off, or isolation, valve shall be installed upstream of the PRV. Additionally, a shut-off valve shall be installed downstream of the backflow preventer isolating the meter assembly to facilitate repairs. For service lines up to 3 inches, ball or gate valves will be allowed. For service lines 3" and above, only gate valves will be allowed. Butterfly valves are prohibited. Refer to detail B-05.

2.12.4 Backflow Prevention Devices

Backflow prevention devices are required on all Water Services. Refer to Appendix G of these Rules and Regulations for Backflow Prevention regulations.

2.12.5 Water Meter

All domestic connections to the District's Water System shall include a Water Meter. The meter type and size shall be determined by the District. The District will provide the Customer with a meter once the Customer has paid the appropriate meter fee.

The Customer shall install the meter per the specifications below.

(a) The location of the meter is subject to District approval. The meter location shall be adequately insulated to protect from freezing, fully accessible, adequately ventilated, well-lit, and shall not meet the definition of confined space, as defined by the Occupational Safety and Health Administration (OSHA), unless approved by the District. The design of meter pits must be approved by the District and shall be in conformance with Section 2.13. Meters in crawl spaces are not recommended. Crawl space meter installations are subject to prior approval by the District's meter technician. Any meter installation in a crawl space must have adequate lighting, adequate working room, and be within (3) feet of the opening.

(b) The District shall inspect the installation of all water meters. The Customer will be provided with a three-strand wire for installation of a transmitter. Prior to meter inspection and water Turn-On, the Customer shall install the meter assembly and the wire from the meter location to an appropriate transmitter installation site. The transmitter will be located five (5) feet above ground in an accessible location free from snow that will provide year-round access for District personnel. The maximum distance from the meter to the transmitter shall not exceed one hundred (100) feet without approval of the District. Meters shall be installed in a horizontal position unless manufacturer specifications allow. The Meter shall be no higher than three (3) feet above and no lower than six (6) inches above the floor, as measured from the bottom of the Meter.

(c) The Customer is solely responsible for protecting the meter from freezing, or any other physical damage.

Water will remain turned off until the District accepts payment of all Connection fees.

2.12.6 Bypass Piping on Commercial Meters

All water meters greater than 1.5 inch in size and serving six (6) or more Residential Units, mixed commercial/residential developments, or a commercial development shall be installed with a bypass line equipped with isolation valves to allow for maintenance of the meter without interruption of water service to the Customer. The bypass line will be unmetered and secured with a District padlock. Refer to Detail B-05.

2.13 Stop and Waste Valves

Stop and waste valves are prohibited.

2.14 Meter Pits

Meter pits shall be adequately sized to contain the meter assembly and allow for maintenance of the assembly. Meters will be required to be installed in a precast concrete manhole with an overall depth of 84 inches.

Meter pits shall be installed at the property line or the edge of easement, and downstream of the Curb Stop valve. A 5’ high 4” x 4” post shall be provided for the Radio Transmitter Unit. A 3-strand wire provided by the District shall be run from the meter to the top of the post. Refer to Detail B-06 and B-07.

2.14.1 Manhole Bases

Precast concrete, ASTM C478, minimum 48-inch diameter or District approved alternative.

2.14.2 Manhole Sections

Precast concrete, ASTM C478, with the inside lip higher than the outside lip, minimum 48-inch diameter or District approved alternative. Concrete cone sections shall be eccentric.

2.14.3 Manhole Rings and Covers

For installations located in public rights of way manhole rings and covers shall be cast iron, ASTM A48, with a flat lid with the lettering “WATER” cast on the cover. Ring and cover combined weight shall be greater than 255 pounds and machined to fit securely with a non-rocking cover. Lid shall be waffle patterned, and able to withstand HS-20 traffic loading.

2.14.4 Manhole Steps

For concrete manholes only, non-skid steps shall be installed capable of carrying a load of 1,000 pounds, installed six (6) inches from the face of the manhole. The steps shall conform to ASTM C478 and be plastic coated.

2.14.5 Manhole Joint Sealant

Double RUBR-NEK LTM butyl rubber flexible gasket-type sealant shall be applied to all manhole joints with RUB'R-NEK primer. One (1) inch on 48-inch diameter manholes; 1.5 inch on all larger sizes.

2.15 Repair Couplings

Repairs to Water Services located between the curb stop and the structure that require couplings shall be made only by the use of a silver-soldered joint or electrofusion for copper and HDPE, respectively. Solid sleeves are to be used with DIP. All repairs shall be inspected and approved by the District prior to backfill.

3.1 Materials

3.1.1 Polyvinyl Chloride (PVC) non-pressure:

SDR-35/SDR-26

4 to 8 inches (4" to 8"): ASTM D3034, SDR-35/PS46 or ASTM D3034, SDR-26/PS115

Maximum pipe length shall be 20 feet (20'). Joint lubricant shall be supplied by the pipe manufacturer. Joint lubricant shall be non-toxic and water-soluble.

3.1.2 Polyvinyl Chloride (PVC) pressure:

Yelomine: SDR-21, Restrained joint PVC pressure pipe and fittings having a minimum cell classification of 12454, as defined in ASTM D1784. Conform to ASTM D2241 "Standard Specifications for PVC, pressure rated pipe, 200 psi (SDR Series)."

AWWA C-900 for 4 " through 8" diameter pipe, pressure class 235 psi, DR18, with push-on joints and flexible elastomeric seals ASTM D3139/ASTM F477. All spigot ends shall be beveled to manufacturer's specifications with gaskets meeting ASTM F477 and joints in compliance with ASTM D3139.

For 1 ½" service lines utilizing an ejector pumping system, either Polyethylene (PE) or PVC shall be used. PE piping shall be AWWA C901, pressure class 150 psi. Joints shall be fusion type in accordance with AWWA C901. PVC shall be schedule 80 meeting the requirements of ASTM D1785, with solvent welded, socket type fitting meeting the requirements of ASTM D2467.

3.1.3 Ductile Iron:

Pipe per ASTM A746, Class 52, 350 psi, AWWAC151. Push-on joints per ANSI/AWWA C111/A21.11. Factory applied Protecto 401, or equivalent, ceramic epoxy interior lining for DIP & fittings. U.S. Pipe and Foundry Company/Griffin Pipe Products or approved equal.

3.2 Service Line Design

(a) The Wastewater Service gravity piping shall be four (4) inch or greater in diameter.

(b) Gravity wastewater services shall be installed at a constant grade of not less than one quarter (¼) inch per foot, (2%) with a minimum of bends and no glue joints.

(c) Clean Outs should be installed every 100 feet, at every change of direction 45 degrees or greater, and a maximum of three (3) feet from the face of the building Cleanouts located within ROW require a traffic rated cleanout cover.

(d) If the service line is pressurized via lift station or ejector system, the service line shall be designed by an Engineer and submitted with the Connection Application for review and approval by the District.

(e) The service line must be electronically locatable from the sewer main to the structure or building being served, terminating at the cleanout located near the building footprint. Refer to Appendix E.

3.3 Separation of Services

Refer to Appendix B, Section 2.3

3.4 Depth of Bury

Wastewater Service piping shall be buried a minimum of four feet six inches (4’ 6”) below the ground surface. If minimum bury depth cannot be achieved, insulation is required per Appendix D. A depth of bury greater than fourteen (14) feet requires the approval of the District.

3.5 Bedding Material

Bedding material shall consist of uniformly graded granular material, 3/8-inch or ¾-inch minus screened rock material, installed six (6) inches below and twelve (12) inches above the Service pipe. Refer to Appendix E.

3.6 Underground Warning Tape

Underground Warning Tape shall be installed twenty four inches (24”) above all buried portions of the Wastewater Service. The tape shall meet the following requirements:

(a) Five (5) mil thick Polyethylene tape
(b) Solid green color with black lettering
(c) Six (6) inches in width

3.7 Tracer Wire

See Appendix E

3.8 Connections, and Requirements for Inspection

3.8.1 Wastewater Service Connections

The connection of the Wastewater Service to the Wastewater Main shall be made as follows:

(a) A factory wye shall be installed on all new mainline installations for service line stub outs on gravity mains. The wye shall be located no closer than ten (10) feet from a manhole. A saddle tap, provided by the District, shall be used on new service line connections to existing mainlines. All service connections shall be above spring line.

(b) On four inch (4”) or six inch (6”) diameter new service connections to existing mains, a saddle connection is required. The saddle connection shall be located no closer than ten (10) feet from a manhole. The flow line of the Service pipe shall enter the Main above the spring line of the Main. Connections into manholes are prohibited. All Connections up to six (6) inches in diameter shall be made by District personnel.

(c) If the Service pipe is eight (8) inches or greater in diameter, the connection shall be made into an existing manhole or into a new manhole placed on the existing Main. Connections eight (8) inches or greater in diameter shall be made by a qualified contractor on behalf of the Customer and witnessed and inspected by a District Inspector.

3.8.2 Wastewater Service Requirements for Inspection

No Services shall be covered with bedding material or backfill without the District Inspector’s approval. All portions of the Wastewater Service must be visible to the District Inspector for an inspection to be completed.

3.9 Stub Out Abandonment

If a Stub Out pre-exists on a property and will not be utilized by the Customer, the Stub Out must be abandoned by the Customer by one of the following methods:

1. The Customer shall cut and cap the service at the main. The abandonment shall be inspected by the District prior to backfill. The use of a Stub Out for Connection to the Wastewater Main must be approved by the District.

2. The Customer shall cut and cap the service at the property line and abandon the stub out at the main with a Cured-In-Place Pipe Point Patch (CIPP-PP). The abandonment shall be inspected by the District prior to backfill. The use of a CIPP-PP shall meet the following conditions:

a. The CIPP-PP shall be designed against corrosion and typical chemicals found in domestic sewage. The System Supplier shall provide testing data that supports the chemical resistance in accordance with ASTM F1216 on the exact CIPP-PP system to be used.

b. The CIPP-PP shall be a full wrap section; the CIPP-PP liner sheet shall be flat with one end overlapping the second end by a minimum of 10% and sized accordingly to create a circular liner equal to the inner diameter of the pipe. To ensure a properly tight fitting full wrap in the pipe and consistent minimum wall thickness, pre-manufactured tubes will not be permitted.

c. The contact surface area of the packer shall extend past the termination points of the CIPP-PP liner, thereby ensuring both ends remain open and fully pressed against the host pipe. The packer shall distribute the excess resin into a natural taper at both ends of the CIPP-PP liner.

d. The resin shall be cured to form the CIPP-PP into a structural, water tight Cured-in-Place pipe-within-a-pipe. When cured, the CIPP-PP shall seal the pipeline section in a continuous tight-fitting, leak-proof seal. The CIPP-PP shall eliminate any visible leakage and shall provide a water-tight seal to prevent root intrusion, infiltration, and ex-filtration between the CIPP-PP and the host pipe.

e. The installed CIPP-PP shall be free from visual defects such as foreign inclusions, dry spots, pinholes, major wrinkles (greater than 2% of the pipe diameter) and de-lamination. The system shall be impervious and free of any leakage including exfiltration from the pipe to the surrounding ground or infiltration from the ground to inside the lined pipe.

f. Before the work starts, the Customer shall provide the District with a pre-installation CCTV inspection showing the service tap(s) that will be abandoned via CIPP-PP

g. After the work is completed, the Customer will provide the District with a post-installation CCTV inspection in the specified video format, including NASSCO PACP coding, showing the completed work including the restored conditions.

h. The materials used for the project shall be certified by the System Supplier for the specified purpose. The System Supplier shall warrant the CIPP-PP materials to be free from defects in raw materials for one (1) year from the date of manufacture. The Contractor shall warrant the “as-built” CIPP-PP

for a period of one (1) year after installation or from the date of acceptance by the District, whichever is later.

3.10 Reuse of Existing Sewer Service Line

The Customer shall provide the District with CCTV footage of the proposed sewer service line for reuse to confirm the sewer service line is an acceptable condition for reuse. Existing service lines with materials that do not meet the current specifications will not be allowed to be reused.

3.11 Repair Couplings

Repair Couplings shall be Sheer Guard, Max Adapter or approved equivalent on a wastewater service line must be compatible with the Sewer Service pipe, installed per the manufacture's specifications and inspected by District personnel.

3.12 Prohibited Discharges

Floor drains and garage drains shall not be connected to the Wastewater System without written permission from the District. Please refer to Article VI of the Rules and Regulations.

SECTION IV -STANDARD SERVICE LINE FORMS & DETAILS

Form B1: Requirements Checklist for New Service Line Inspection

B-01: Water Service Stub Out with Mainline Tracer Wire

B-02: Water Service Stub Out without Mainline Tracer Wire

B-03: Service Line Tapping with Mainline Tracer Wire

B-04: Service Line Tapping without Mainline Tracer Wire

B-05: Meter Assembly Diagram

B-06: Service Line Meter Vault

B-07: Service Line Meter Vault – Temporary Construction or Irrigation

B-08: Sewer Service Connection

B-09: 2” or Smaller Water Service Line with Mainline Tracer Wire

B-10: 2” or Smaller Water Service Line without Mainline Tracer Wire

Form B1: **Requirements Checklist for New Service Line Inspection**

Failure to meet these requirements may be subject to a $168 Re-inspection fee.

☐ **1**. The trench shall be adequately benched or shored, and the safety of workers provided for as required by the most recent standards adopted by OSHA. The District inspector reserves the right to refuse to inspect if all applicable OSHA standards are not met or if they feel unsafe in any way.

☐ **2.** All pipe material, fittings, and appurtenances shall comply with the material specifications listed in Two Rivers Metropolitan District Rules & Regulations-Appendix B.

☐ **3.** New taps on existing mains are made by District personnel or authorized representative.

☐ **4**. Taps must be a minimum of 18" apart and at least 18" from the nearest bell and spigot joint.

☐ **5.** Water Services shall be buried a minimum of seven (7) feet and a maximum of nine and a half (9.5) feet below the ground surface. If minimum bury depth cannot be achieved, insulation is required per Appendix B, Section 2.4.1.

☐ **6**. Wastewater Service piping shall be buried a minimum of four feet six inches (4' 6") below the ground surface. If minimum bury depth cannot be achieved, insulation is required per Appendix B, Section 2.4.1. A depth of bury greater than fourteen (14) feet requires the approval of the District and may require a change of materials.

☐ **7**. Gravity wastewater services shall be installed at a constant grade of not less than one quarter (¼) inch per foot, or 2%, with a minimum of bends and <u>no</u> glue joints outside of the structure served.

☐ **8**. Clean Outs should be installed every 100 feet, at every change of direction equal to or greater than 45 degrees, and a maximum of three (3) feet from the face of the building. Clean Outs are <u>not</u> to be located in ROW.

☐ **9**. The Curb Stop shall be located a maximum of one (1) foot within the property line or edge of easement and shall be easily accessible to District personnel. Refer to curb stop detail B-01 for services less than or equal to 2" and B-02 for services greater than or equal to 4".

☐ **10**. At least ten (10) feet of horizontal separation must be maintained between parallel Water and Wastewater Services. District authorization must be obtained to install Water and Wastewater Services with less than ten (10) feet of horizontal separation. Water and wastewater service lines shall not cross. In cases where it is not practical to maintain a ten-foot (10') separation, refer to Appendix B, Section 2.3.2.

☐ **11**. The trench shall be excavated so that a minimum clearance of six inches (6") shall be maintained on each side of the pipe for proper placement and compaction of the bedding or backfill material.

☐ **12**. Bedding material shall consist of uniformly graded granular material, 3/8-inch or ¾-inch minus screened rock material, laid six (6) inches below and twelve (12) inches above the service pipe.

☐ **13**. Tracer wire on is required on all water service lines and shall be #12 AWG 0.1019" diameter copper conductor or copper clad steel insulated with a 30 mil, high-density, high molecular weight polyethylene (HDPE) insulation, blue in color, and rated for direct burial use at 30 volts. Service line tracer wire shall be connected to mainline tracer wire using approved splice connectors. If no mainline tracer wire is present, a grounding anode will be installed beneath the tapping saddle. Tracer wire shall be spliced at the curb stop, and an anode, with separate anode lead wire, installed at that location. An at-grade tracer wire access box shall be installed adjacent to the curb box. The service line tracer shall then follow the service line and terminate at a grounding anode adjacent to the structure served.

Tracer wire is required on all sewer services and shall be #12 AWG 0.1019" diameter copper conductor or copper clad steel insulated with a 30 mil, high-density, high molecular weight polyethylene (HDPE) insulation, green in color, and rated for direct burial use at 30 volts. Sewer service tracer wire shall be connected to mainline tracer wire using approved splice connections. If no mainline tracer wire is present, a grounding anode will be installed beneath the sewer tap location. Tracer wire shall follow the service line (secured with tape) and shall terminate in an at-grade tracer wire access box located adjacent to the cleanout closest to the structure being served. A grounding anode shall be installed beneath the cleanout wye and a separate anode lead wire shall be installed from the anode to the tracer wire access box.

Please refer to Appendix E for all tracer wire requirements.

☐ **14**. Underground Warning Tape shall be installed twenty-four inches (24") above all buried portions of services. The tape shall meet the following requirements: Five (5) mil thick Polyethylene tape, solid green (sewer) or blue in color (water), respectively, with black lettering, six (6) inches in width.

☐ **15**. No Services shall be covered with bedding material or backfill without the District Inspector's approval. All portions of the Service must be visible to the District Inspector for an inspection to be completed.

☐ **16**. If a Stub Out pre-exists on a property and will not be utilized by the Customer, the Stub Out must be abandoned by the Customer pursuant to Appendix B.

This requirements checklist does not include all specifications related to water and wastewater service connections. A complete description of the requirements for new service connections can be found in the Rules & Regulations available at https://tworivershoa.com/metro-district/

RULES AND REGULATIONS

FOR

WATER AND WASTEWATER SERVICE

TWO RIVERS METOPOLITAN DISTRICT

APPENDIX C

STANDARD SPECIFICATIONS FOR WATER MAINS

TABLE OF CONTENTS

SECTION I – GENERAL 5
1.1 Authority 5
1.2 Effective Date of Specifications 5
1.3 Revisions, Amendments, or Additions 5
1.4 Definitions 5
1.5 Development Approval and Infrastructure Acceptance 5
1.6 Variance 5
SECTION II – DISTRIBUTION SYSTEM DESIGN AND LAYOUT 6
2.1 General Requirements 6
2.2 Corrosion 6
2.2.1 Dissimilar Materials 6
2.2.2 Insulating Joints 6
2.3 Sizing Distribution Mains 6
2.4 Fire Protection 6
2.5 Distribution Regulating Requirements 7
2.6 Layout of the Distribution System 7
2.6.1 Easement Width Requirements for Main Installations 7
2.6.2 Fire Hydrants 7
2.6.3 Pipe Bollards 8
2.6.4 Line Valves 8
2.6.5 Joint Restraint 8
2.6.6 Groundwater Barriers 8
2.6.7 Depth of Bury 8
2.6.8 Location Tape 9
2.6.9 Abandonment of Existing Water Mains and Valves 9
2.6.10 Pipe Deflections/Bends 9
2.6.11 Tees/Crosses 10
2.6.12 Pressure Reducing Valve Vaults 10
2.6.13 Main Insulation Requirements 10
2.6.14 Air Vac Vaults 10
2.6.15 Minimum Distance from Structures 10
2.6.16 Encased Piping 10
2.7 Operating Pressures 10
2.8 Protection of Potable Water Supplies 10
SECTION III – MATERIAL SPECIFICATIONS 11
3.1 General Requirements 11
3.2 Pipe and Fittings 11
3.2.1 Ductile Iron Pipe 11
3.2.2 Steel Pipe 11
3.2.3 HDPE Pipe 12
3.2.4 Fittings for Ductile Iron Pipe 12
3.2.5 Joint Restraint Devices 12
3.2.6 Solid Sleeves 13
3.2.7 Tapping Sleeves 13
3.2.8 Joint Lubricant 13
3.2.9 Polyethylene Encasement and Bond Breaker 13
3.3 Valves 13
3.3.1 Gate Valves 13
3.3.2 Valve Boxes 14

3.3.3 Air Release/Vacuum Valves 14
3.3.4 Butterfly Valves 15
3.4 Fire Hydrants 15
3.4.1 Fire Hydrants 15
3.4.2 Fire Hydrant Extension Sections 16
3.4.3 Guard Valves 16
3.4.4 Fire Hydrant Marker Flags 16
3.5 Marking Tape 16
3.6 Thrust Blocks and Anchors 16
3.6.1 General Requirements 16
3.6.2 Concrete Material 17
3.6.3 Concrete Mix 17
3.6.4 Form material 17
3.7 Precast Concrete Manholes and Vaults 17
3.7.1 General Requirements 17
3.7.2 Manholes 18
3.7.3 Vaults 18
3.7.4 Grade Beams 18
3.7.5 Manhole and Vault Appurtenances 18
3.8 Casing Materials and Spacers 19
3.9 Tracer Wire 19
3.10 Automated Flushing Stations 19
SECTION IV – PIPE INSTALLATION AND INSPECTION 21
4.1 Safety 21
4.2 Handling of Materials 21
4.3 Inspection 21
4.4 Inspection and Preparation of Pipe and Fittings 22
4.5 Cutting and Fitting of Pipe 22
4.6 Pipe Joints 22
4.7 Pipe Alignment and Grade 22
4.8 Temporary Plugs 23
4.9 Frost 23
4.10 Lowering of Material into Trench 23
4.11 Installation of Pipe 23
4.11.1 General 23
4.11.2 Ductile Iron Pipe 24
4.12 Installation of Valves 25
4.12.1 Valve Box Installation 25
4.12.2 Installation of Fittings 25
4.13 Fire Hydrants 26
4.13.1 Installation 26
4.13.2 Anchorage 26
4.13.3 Drainage 26
4.13.4 Clearances 26
4.13.5 Operation of Fire Hydrant 27
4.14 Thrust Blocks and Anchors 27
4.14.1 Installation 27
4.14.2 Form Work for Thrust Blocks and Anchors 27
4.14.3 Concrete and Curing Time 27
4.14.4 Compaction of Fill Over Thrust Blocks and Anchors 27
4.14.5 Mechanical Joint Restraints 28

4.15 Air Vac Vaults 28
4.16 Tie in to the District System 28
4.16.1 Tie-ins 28
4.16.2 Tapping Existing Mains 28
4.16.3 Service Stub Outs 28
4.16.4 Operation of Valves 29
4.16.5 Interruption of Service 29
SECTION V – Testing and Acceptance 30
5.1 General Requirements 30
5.2 Tracer Wire Testing 30
5.3 Disinfection 30
5.4 Hydrostatic Pressure Testing 32
5.4.1 General 32
5.4.2 Testing Procedure 32
5.5 Acceptance of Mains and Release for Taps 33
5.6 Vacuum Testing of High Groundwater Air Vac Vaults 33
SECTION VI – STANDARD FORMS and Details 34
Form C1: Pre-Construction Checklist for Water Mainline Installations 34
Form C2: Water System Acceptance Procedure 34
Form C3: Bill of Sale– Water Main 34
Form C4 Water Easement.... 34
Form C5: Lender's Consent 34
C-01: Combination Air Valve/Vacuum Valve + Manhole 34
C-02: Combination Air Valve/Vacuum Valve + Manhole (High Groundwater) 34
C-03: Concrete Thrust Blocks 34
C-04: Parallel Bends 34
C-05: Vertical Thrust Block 34
C-06: Tee Detail 34
C-07: 90° Cross Detail 34
C-08: Fire Hydrant Assembly 34
C-09: Gate Valve and Box Assembly 34
C-10 Anchor Block Cutoff Collar 34
C-11: Groundwater Barrier 34
C-12: Waterline Casing Detail 34
C-13: Polyethylene Wrap 34
C-14: Minimum Cover and Culvert Crossing Insulation Detail 34
C-15: Easement Width Detail 34
C-16: Fire Hydrant Clearances and Bollards 34

SECTION I – GENERAL

1.1 Authority

The Standard Specifications for Water Mains as set forth herein ("Specifications") are promulgated by the Two Rivers Metropolitan District. The interpretation and enforcement of said Specifications is hereby delegated to the Regulations Administrator of the Two Rivers Metropolitan District.

1.2 Effective Date of Specifications

The Specifications shall become effective immediately upon formal adoption by the District and shall supersede all former specifications for water main construction. The most current version of these Specifications is available at www.tworivershoa.com.

1.3 Revisions, Amendments, or Additions

The Specifications may be revised and/or amended. Such revisions, amendments, and additions shall be binding and in full force immediately upon formal adoption by the District.

1.4 Definitions

Please reference the Rules and Regulations for Water and Wastewater Service, Article II.

1.5 Development Approval and Infrastructure Acceptance

Please reference the Rules and Regulations for Water and Wastewater Service, Articles VI.

1.6 Variance

The District recognizes that the strict and literal interpretation of these Rules and Regulations may not be possible in all cases. Please refer to Appendix B for information on the Variance process.

SECTION II – DISTRIBUTION SYSTEM DESIGN AND LAYOUT

2.1 General Requirements

The District requires an Overall Utility Site Plan of the project to be submitted indicating all utilities and their proposed locations for review prior to Construction Plan Approval. All plans submitted shall include a geotechnical report if requested by the District. The design and installation of all facilities shall ensure development of an integrated distribution system. All buried pipe lines shall be electronically locatable with a tracer wire .

2.2 Corrosion

Corrosive soils may present in the District's service area and may lead to the premature degradation of pipe materials and appurtenances. In the event that corrosive soils are found a corrosion protection plan must be approved by the District on a case-by-case basis.

2.2.1 Dissimilar Materials

Cathodic protection and insulation shall be installed as required by the District. Particular care shall be taken to insulate between dissimilar materials.

2.2.2 Insulating Joints

Whenever it is necessary to join pipe of dissimilar metal, or when designated by the District, a method of insulating against the passage of electrical current, approved by the District, shall be provided. Special care shall be exercised during the installation of these joints to prevent electrical conductivity across the joints.

2.3 Sizing Distribution Mains

All mains shall be sized large enough to provide for domestic, irrigation, and fire protection flows to the area requesting service without exceeding maximum pipe velocities of 8 feet per second. The minimum size of all District mains shall be eight inches (8").

The District reserves the right to request oversized mains to provide service for projected future needs. The additional cost for the oversizing may be negotiated between the District and the Applicant and will be reviewed on a case-by-case basis.

2.4 Fire Protection

The Applicant shall coordinate with the District and local fire protection jurisdiction to determine minimum fire protection flow and shall design line sizes accordingly. The quantity and location of fire hydrants in a given area must be approved by the appropriate governmental agency.

The Applicant shall perform all fire hydrant "flow tests". Results of "flow tests" shall be provided to the District and to the local fire authority. All costs associated with the "flow

test" shall be borne by the Applicant. The District shall witness and oversee the "flow test" in conjunction with other appropriate governmental agencies.

2.5 Distribution Regulating Requirements

Regulating installations are required to control pressure, provide pressure relief, and separate pump and gravity zones throughout the distribution system. When main extension plans are submitted for review, the need for regulating installations must be approved by the District as determined by existing and proposed pressure zones, booster pump areas and the existing distribution system piping. Regulating installations shall be categorized as follows:

(a) Pressure Regulating Station

(b) Check Valve Station

(c) Surge Control Station

Location, design, and pressure settings of main line pressure regulating devices will be determined by the District on a case-by-case basis. All regulating installations are considered Major Facilities and will be designed and constructed by the District.

2.6 Layout of the Distribution System

2.6.1 Easement Width Requirements for Main Installations

All mains shall be installed in dedicated public street right-of-ways or dedicated water line easements. The installation of Public Water facilities on developable lots or tracts intended for private use should be avoided to the extent practicable. The standard easement width for all mains shall be a minimum of 20 feet and depth of cover shall be 7 feet to 9.5 feet. The main shall be generally centered within the easement. The easement width shall be in accordance with Standard Detail C-15.

2.6.2 Fire Hydrants

Fire hydrant branch lines shall be set at right angles to street mains. The fire hydrant shall be set at the end of the branch line and shall face the direction as dictated per local fire authority. No bends or offsets shall be used in installing fire hydrant branch lines unless approved by the District. Under no circumstances shall any size or manner of tap be made on a fire hydrant branch line between the hydrant and hydrant valve. The maximum length of a 6-inch hydrant branch line is 50 feet. All fire hydrant valves shall be attached to the tee off of the main. A fire hydrant shall be installed at the end of all dead end water mains.

Fire hydrant depths shall be 7-feet to 9.5-feet. All fire hydrants shall be installed within dedicated streets, right-of-ways, or easements as herein above defined. Fire hydrant flange elevations shall be indicated on plans.

Fire hydrants shall be installed at locations approved by the Fire Department, the District and the appropriate governmental agency.

2.6.3 Pipe Bollards

Pipe bollards are required where there is less than three (3) feet clearance to a vehicle drive isle edge of pavement or back of curb (whichever is less). Pipe bollards must be three feet minimum height. No pipe bollards shall be constructed in front of fire hydrant outlets. Bollard must be painted “traffic signal yellow. See detail C-16

2.6.4 Line Valves

Line valves are required at a minimum of every one thousand (1,000) feet. Additional valves, subject to District approval, are required to further isolate the system at all main branches, and at other locations as determined by the District for operation of the water system. A smaller diameter bypass line and valve may be required to facilitate large diameter valve opening in high pressure applications, as determined on a case-by-case basis. The applicant shall identify all locations on their submittal where line diameters exceed 12” and static pressures exceed 100psi. The District will then determine the appropriate desired solution (valve type and/or bypass).

2.6.5 Joint Restraint

Water mains require the use of joint restraints such as thrust blocks and mechanical joint restraints. Mechanical joint restraints shall be used in conjunction with all thrust block installations. Thrust blocks may be eliminated at the District’s discretion on a case-by-case basis if joint restraints and restrained pipe lengths have been calculated by a Registered Professional Engineer. When water mains are installed in a fill condition rather than in undisturbed earth, mechanical joint restraints shall be required at all pipe connections.

All thrust blocks shall be constructed per the District’s Concrete Thrust Block details C-03, C-04, and C-05 and Material Specification 3.6. Submitted construction drawings shall identify all thrust blocks with specific station numbers (at valves, fire hydrants, bends & where required). All thrust blocks shall be inspected and approved by the District Inspector prior to backfill.

2.6.6 Groundwater Barriers

Groundwater barriers may be required in areas where the groundwater table is encountered. The contractor shall notify the Engineer and District Inspector immediately if groundwater is encountered in an excavation.

2.6.7 Depth of Bury

The depth of cover for water lines shall be a minimum of seven feet (7') and a maximum of nine feet six inches (9'-6") from finish grade to the top of the water line. Any water main that is outside of the required depth of bury must have an approved variance. Under no circumstances may a water main be buried with less than five feet (5’) of cover.

2.6.8 Location Tape

All lines connected to District mains in any way shall be marked with the appropriate locating tape per Section 3.5.

2.6.9 Abandonment of Existing Water Mains and Valves

All abandoned water mains shall be appropriately terminated at the main connection with a mechanical joint cap, plug or equivalent. The Contractor shall maintain the existing waterline until such time as the new waterline has been disinfected, pressure tested and accepted. Valve stacks on abandoned lines shall be completely removed and backfilled.

2.6.10 Pipe Deflections/Bends

All plans must indicate deflections, elbows, bends, and the degree of deflection. Pipe deflections shall not exceed the Manufacturer's maximum recommended deflection or the values identified in Table C-1, below, whichever is lower. . Joint restraints shall be used in all change of direction fittings. The use of two 45-degree elbows is preferable to the use of 90-degree elbows. The use of 90-degree elbows will be considered on a case-by-case basis.

Normal Pipe Size (in.)	Deflection Angle (deg.)	Max. Offset (inches)		Approximate Radius of Curve Produced by Succession of Joints (feet)	
		L = 18’	L = 20’	L = 18’	L = 20’
4	5	19	21	205	230
6	5	19	21	205	230
8	5	19	21	205	230
10	5	19	21	205	230
12	5	19	21	205	230
14	3	11	12	340	380
16	3	11	12	340	380
18	3	11	12	340	380
20	3	11	12	340	380
24	3	11	12	340	380

Table C-1 - Maximum Deflection Full Length Pipe - Push-On Joint Pipe

2.6.11 Tees/Crosses

All perpendicular main to main connections shall be made by cutting in a tee or cross. Tees and crosses shall be clearly indicated on the plans, and valves shall be installed on each leg. Wet taps shall not be permitted for mainline extensions. Refer to Appendix B for service line connection requirements.

2.6.12 Pressure Reducing Valve Vaults

All pressure reducing valve vaults shall be located out of the roadway, but within the right-of-way or an adjacent utility easement.

2.6.13 Main Insulation Requirements

For every foot of cover that is out of compliance with minimum cover requirements for mains, the District will require the installation of 1-inch of insulation board per Appendix E Section 1.14. In addition to maintaining cover from the ground surface, specified cover is required from storm sewer crossings and other cold air sources.

2.6.14 Air Vac Vaults

At all high points in the distribution system, a combination air vacuum and air release valve shall be installed on the main in a minimum five foot (5') diameter manhole. A high point is considered to be one pipe diameter in grade differential.

2.6.15 Minimum Distance from Structures

All main extensions shall be installed at a minimum distance of ten feet (10') from all structures or at a one foot horizontal to one foot vertical (1:1) ratio from the bottom of any structural element, whichever is greater. Encroachments of structures into easements are discouraged and shall only be allowed by written authorization from the District.

2.6.16 Encased Piping

If required by the District, CDPHE regulations, or other governing body, water mains may need to be installed in a casing pipe. Refer to Appendix D, 2.5.3 for pipe crossings. Materials and installation of water mains in casing pipes shall be in conformance with Section 3.8.

2.7 Operating Pressures

Water system materials shall be specified for an operating pressure of 250 psi. The distribution system shall be designed such that the minimum operating pressure at any tap shall be 60 psi and the maximum operating pressure shall not exceed 190 psi.

2.8 Protection of Potable Water Supplies

Please refer to Appendix D, Section 2.5 for design criteria relative to water main installation in proximity to sanitary sewer infrastructure.

SECTION III – MATERIAL SPECIFICATIONS

3.1 General Requirements

All materials shall conform to the District's Specifications. Material substitutions may be considered on a case-by-case basis. Written approval is required prior to furnishing. Applicant must submit shop drawings and specifications for substituted materials considered ‘or equal’ for review and approval prior to the preconstruction conference. A bill of materials shall be furnished to the District Inspector at the preconstruction conference.

All materials utilized shall be new and undamaged. Everything necessary to complete all installations shall be in accordance with the Specifications and all installations shall be completed as fully operable functioning parts of the District's system. Acceptance of materials, or the waiving of inspection thereof, shall in no way relieve the Applicant of the responsibility for furnishing materials meeting the requirements of the Specifications.

3.2 Pipe and Fittings

All pipe and fittings used in the District's System shall meet or exceed the latest AWWA Specifications and follow the guideline lines set forth below. All pipes shall have factory-applied end caps during transportation and storage.

3.2.1 Ductile Iron Pipe

AWWA C151, class 52, working pressure 350 psi, with bituminous outside coating (one-mil thick) and cement-mortar lining per AWWA C104. Pipe joints shall be push-on type utilizing rubber ring gasket in accordance with AWWA C111. Pipe shall be supplied with copper bonding straps and mechanical attachment. A Number 4 conductor and Cad-Welds (charge size CA 45) or the manufacturers' supplied strap shall be used to bond each joint and fitting. Certain conditions may require the use of restrained joint systems. Restrained joint systems will be reviewed on a case-by-case basis and must conform to Section 3.2.6, Joint Restraint Devices.

3.2.2 Steel Pipe

With recommendation from an engineer, and approved by the District, this pipe may be used as an alternative in high pressure applications. All steel pipe and fittings shall be fabricated in accordance with AWWA C200 Standard for Steel Water Pipe-eight inches (8") and larger; and AWWA Manual M-11 Steel Pipe- A Guide for Design & Installation. Working pressure shall be 350 psi.

All material used shall be acceptable under ASTM A283 Standard Specification for Low and Intermediate Tensile Strength Carbon Steel Plates of Structural Quality, or ASTM A36 Standard Specifications for Carbon Structural Steel.

For mill-type pipe, all material used shall be acceptable under ASTM A53 Standard Specification for Pipe, Steel, Black and Hot-Dipped, Zinc-Coated Welded and Seamless.

All fittings shall be fabricated from tested pipe and dye checked in accordance with AWWA C208; and conforms to the dimensions of AWWA C208.

All steel pipe and fittings shall be prepared, primed, lined, coated, painted, or wrapped to protect it from corrosion. Exterior surfaces shall be specified by the Engineer for site specific conditions and approved by the District. All coatings shall be per AWWA standards. Interior Surfaces shall be Cement-mortar lined conforming to AWWA C205. An appropriate cathodic protection system shall be designed by a qualified corrosion engineer.

3.2.3 HDPE Pipe

With recommendation from the engineer, and approval by the District, this pipe may be used as an alternative in those applications where corrosive soils are determined to be found. HDPE shall conform to AWWA C906 and shall be polyethylene material PE4710 DR-7 (ASTM F714) that conforms to ASTM D3350 with the cell classification of 445574C/E.

All HDPE fittings shall meet ASTM D2513, D2683, D3261 and conform to AWWA C906 and ANSI/NSF 61 potable water requirements.

3.2.4 Fittings for Ductile Iron Pipe

Compact fittings shall be made of ductile iron and in accordance with the requirements of AWWA C153, pressure rating 350 psi. Mechanical joints shall conform to AWWA C111. Bolts and nuts shall be low-alloy steel Star Blue Bolts with fluoropolymer coating. All exterior valve body bolting shall be type 304 or 316 stainless steel and shall be provided with hexagonal heads, with dimensions conforming to ANSI B18.2.1. Metric size and/or socket head cap screws or bolts, are not allowed. Flanges shall be machined to a flat surface with a serrated finish in accordance with AWWA C207. All fittings shall be cement-mortar lined, AWWA C104. Bituminous outside coating shall be a minimum of one-mil thick in accordance with AWWA C151.Fittings must meet or exceed pipe classification.

3.2.5 Joint Restraint Devices

Joint restraint devices shall be constructed of ASTM A536, 65-45-12 Ductile Iron. Twist-off nuts, sized the same as the tee-head bolts, shall be used to ensure proper actuating of restraining devices. Mechanical Joint restraint devices shall be EBAA Iron, Inc., Megalug Series 1100,Uni-Flange Corp.(Ford) UFR 1400 Series or Sigma One-Lok Series for new pipe restraint and EBAA Iron Sales, Megalug Series 1100SD or 1100HD or Uni-Flange UFR1300-C or UFR1390-C for existing pipe restraint, or accepted equal. Field locked gaskets are allowed with prior approval from the District. Bell-Spigot Restraint devices shall be Star Pipe Products StarGrip 3100P Series; U.S. Pipe and Foundry Company Field Lok Gasket; EBAA Iron, Inc., Megalug Series 1700 or accepted equal.

3.2.6 Solid Sleeves

Solid sleeves shall be made of ductile iron, mechanical joint, long body. Sleeves shall have a minimum pressure rating of 350 psi. A solid sleeve is to be used to join two pieces of pipe of the same diameter where no bell and spigot are present. A "wedding band" is to be inserted between the two pipes inside of the solid sleeve. No other couplings will be accepted.

3.2.7 Tapping Sleeves

Tapping sleeves and wet taps are not permitted for mainline extensions. Tapping sleeves and wet taps are permitted for service line connections. Tapping sleeves are not allowed on fire hydrant laterals.

3.2.8 Joint Lubricant

Joint lubricant shall be supplied by the pipe manufacturer. Joint lubricant shall be non-toxic, water-soluble, and certified to meet ANSI/NSF 61 Potable Water Requirements.

3.2.9 Polyethylene Encasement and Bond Breaker

Ductile Iron Pipe shall be encased in polyethylene. The polyethylene encasement material shall be manufactured in accordance with AWWA C105/A21.5, with the following requirements: Polyethylene encasement shall either be linear low-density polyethylene film with a minimum thickness of 8 mils or high density polyethylene film with a minimum thickness of 4 mils. Flat tube material shall be used for pipe and fitting encasement; flat sheet material shall be used for valve encasement. The polyethylene encasement shall be installed in such a way that it shall prevent contact between the pipe and the surrounding backfill and bedding material. The raw material used to manufacture polyethylene film shall be Type 1, Class A, Grade E1, in accordance with ASTM D1248. Enhanced polyethylene encasement may be required in highly corrosive soil environments as identified by soils testing in accordance with Appendix A of ANSI/AWWA C105/21.5.

V-Bio Enhanced Polyethylene encasement may be required based upon corrosivity tests and soil moisture content.

3.3 Valves

The valves shall be the same size as the main and follow the guidelines set forth below:

3.3.1 Gate Valves

Valves 4"-24" in size shall be resilient wedge gate valves with a working pressure of 250 psi. Body components shall be epoxy coated ductile iron or cast iron and shall be manufactured in compliance with AWWA C509 or C515. Valves shall have non-rising stems made of bronze in accordance with ASTM B 763. Valve wedge shall be constructed

of ductile iron and provided with protective wedge guide covers in sizes 4"-24". All wedges shall be fully encapsulated with EPDM rubber.

Valve bodies shall be designed to allow for the lifting of the valves by the bonnet flange, gland flanges, or other appurtenances. All internal and external ferrous surfaces of the valve shall have a fusion-bonded epoxy coating, complying with AWWA C550. End connections shall be mechanical joint. Mechanical joint components shall be in accordance with AWWA C111 with tee-head bolts and hexagon nuts fabricated from a high strength, low alloy steel including Star Blue Bolts with fluoropolymer coating, 304 or 316 stainless steel. Valves shall be capable of operating satisfactorily with bidirectional flows and shall provide zero leakage past the seat. Acceptable gate valves shall be Mueller A-2361, Waterous AFC-2500, or AVK Series 45. Valves shall have 2-inch operating nut with stem seal consisting of two O-rings.

Direction of opening: All District valves are to open left (counterclockwise).

Valve openings shall be furnished and installed with valve boxes and covers in accordance with Section 3.3.2.

The valve shall be structurally designed so that if excessive torque is applied to the stem in the closing direction, with the disc seated, failure of the pressure retaining parts does not occur. Stem failure under such conditions shall occur externally at such a point as to enable the stem to be safely turned in the opening direction by use of a pipe wrench.

3.3.2 Valve Boxes

Valve boxes shall be Tyler 6860, D&L M-9042 (with an M-9071-73 Extension), East Jordan 8560 or Castings Inc CI-5000. All buried valves shall be provided with a six-inch (6") cast iron (ASTM A48, Class 35B) valve box, 3 piece adjustable screw type with 16-inch top section, variable extensions and 30-inch bottom and base; with minimum five-inch (5") diameter shaft and a cover marked "Water". The valve box shall be of a design which will not transmit shock or stress to the valve and which shall have enough extension capability to be raised to final street grade.

3.3.3 Air Release/Vacuum Valves

Air Release/Vacuum Valves shall be sized by the engineer and manufactured by ARI, Model No. D-040 Combination Air Valve and Thermal Protection Jacket. The valve shall be designed and manufactured in accordance with AWWA C512. Valve shall have reinforced nylon body and base, with a Foamed Polypropylene float and E.P.D.M. rolling seal. Valve seats shall be Buna-N. The seat shall be fastened into the valve cover, without distortion, and shall be easily removed, if necessary. Air release/vacuum valves shall be installed at all high points in the system on any main line extensions. A four (4) foot diameter manhole is required for this installation. High Groundwater Manholes are required in all areas of high groundwater. (See Combination Air Valve/Vac and Manhole Details C-01 and C-02).

3.3.4 Butterfly Valves

Butterfly valves may be permitted on line sizes 12” or larger on a case by case basis with approval from the District. All butterfly valves shall comply with AWWA C504 class 250B. Valve bodies shall be constructed of ductile iron in accordance with ASTM A126, Class B or ASTM A536 Grade 65-45-12 and shall be coated in accordance with AWWA C504. Valve discs shall have a 316 stainless steel edge and shall be constructed with ASTM A48, Class 40 cast iron, ASTM A536, Grade 65-45-12 ductile iron, ASTM A436, Type 1 Alloy Cast Iron or Bronze in accordance with AWWA C504. Shaft material shall be stainless steel, 18-8, Type 304 or 316.

The seat material shall be NBR (acrylonitrile-Butadiene). End connections shall be mechanical joint ends or flanged end, drilled to ANSI B16.1 Class 250 standards. Valves shall be capable of operating satisfactorily with bidirectional flows and shall provide zero leakage past the seat. Acceptable butterfly valves shall be Muller Lineseal XP and XPII or approved equal.

Direction of opening: All District valves are to open left (counterclockwise). Valve openings shall be furnished and installed with valve boxes and covers in accordance with Section 3.3.2.

The valve shall be structurally designed so that if excessive torque is applied to the stem in the closing direction, with the disc seated, failure of the pressure retaining parts does not occur. Stem failure under such conditions shall occur externally at such a point as to enable the stem to be safely turned in the opening direction by use of a pipe wrench.

3.4 Fire Hydrants

Hydrants shall follow the guideline lines set forth below:

3.4.1 Fire Hydrants

Fire hydrants shall be Mueller Centurion A423 Hydrant or Kennedy Guardian (K81D), unless otherwise specified in writing by the local fire protection agency. Hydrants shall conform to AWWA Standard C502 with a working pressure of 250 psi. The base provided shall be a six-inch (6") mechanical joint inlet to accommodate 6 inch ductile iron pipe complete with plain rubber gasket, gland, bolts, and nuts in accordance with AWWA C111; minimum 5 1/4 inches barrel, main valve opening three way (two 2 1/2-inch hose nozzles, one 4 1/2-inch pump nozzle), compression-type main valve that closes with pressure, nozzle threads ANSI B26. Nozzles must be easily replaceable in the field with standard tools. Operating and cap nuts must be 1 1/2-inch, Number 17 National Standard hex main valve that open to the left (counter-clockwise). Exposed exterior surfaces below the ground line shall be coated with asphalt varnish in accordance with AWWA C502. The interior of the hydrant shall be coated with an epoxy coating in accordance with AWWA C502. Epoxy paint shall be ANSI/NSF 61 approved. The hydrant shoe and connecting gland shall be lined and coated with fusion-bonded epoxy in accordance with AWWA C116. An arrow cast on top of hydrant shall indicate direction of opening. There shall be a breakable section that permits clean break at or near ground level, preventing water loss

in case of breakage. Working parts must be removable for maintenance or repair without excavation. The operating mechanism shall be non-wetting, oil reservoir lubricated, with O-ring seals and dual bronze barrel drain valves mounted with at least two (2) outlets, which operate automatically with main valve. Top of Fire hydrant flange shall be set 6" above finished grade and flange elevation shall be indicated on plans.

3.4.2 Fire Hydrant Extension Sections

New Installations: The use of fire hydrant extension sections is prohibited on new hydrant installations; all fire hydrants shall consist of a single solid shaft. . A new installation is defined as a main extension within the two-year (2) warranty period.

Existing Fire Hydrants: No more than one (1), two-foot (2') long, fire hydrant grade extension kit with centering spindle (extension section) compliant with the hydrant specifications in 3.4.1 shall be used or installed on existing fire hydrant assemblies.

3.4.3 Guard Valves

Hydrant guard valves shall be six inch (6”) diameter gate valves in accordance with the requirements in Section 4.13.1.

3.4.4 Fire Hydrant Marker Flags

All hydrants require a Nordic Fiberglass, Inc. Nordic Flexi Flag, FF2-72 inches. No substitutions are permitted.

3.5 Marking Tape

Marking tape is required on all water mains. The tape shall meet the following specifications:

(a) Five (5) mil thick Polyethylene material.
(b) Solid "blue" color with black lettering.
(c) Six inches (6") in width.

3.6 Thrust Blocks and Anchors

3.6.1 General Requirements

Concrete thrust blocks and anchors shall be used in conjunction with mechanical joint restraints and shall be sized for the maximum operating pressure with a 50 psi surcharge and the soil bearing capacity. All thrust blocks shall be formed in accordance with the District's Specifications and Concrete Thrust Block Details C-03, C-04, and C-05. No thrust block shall be smaller than that size required for an eight-inch (8") main fitting. All fittings that require thrust blocks must include a bond breaker utilizing polyethylene encasement, per Section 3.2.8.

All thrust block installations shall be inspected by the District’s inspector prior to backfill.

3.6.2 Concrete Material

(a) Source: All materials shall be furnished from sources agreed to by the District and Engineer.

(b) Cement: ASTM C-150 for Portland Cement, Type II.

(c) Aggregate: All fine and course aggregate shall conform to ASTM C33.

(d) Water: Water used in mixing or curing concrete shall be potable water, clean and free from deleterious substances, and free of oils, acids and organic matter.

(e) Concrete reinforcement: Steel reinforcing bars shall be in accordance with ASTM A 615, Grade 60.

3.6.3 Concrete Mix

Ready-mixed concrete shall be CDOT Class B or D, proportioned, mixed, and transported in accordance with ASTM C94. Any concrete not plastic and workable when it reaches the project shall be rejected.

Job mixed concrete shall be thoroughly mixed to combine aggregates, cement, and water into a uniform mass. and shall contain approximately 5 ½ sacks of Type II Portland cement per cubic yard and have a 28-day compressive strength of not less than 4000 psi when molded and cured in accordance with ASTM C 31. Maximum water/cement ratio 0.45-0.48. Maximum aggregate size ¾”, air content 5-7%, maximum 4” slump.

3.6.4 Form material

Forms may be made of wood (3/8” plywood) or other acceptable materials approved by the District. Wooden forms shall be thoroughly wetted except in freezing weather or a form release agent applied.

3.7 Precast Concrete Manholes and Vaults

3.7.1 General Requirements

Concrete: Minimum 28 day strength of 4,500 psi with a minimum of 560 pounds of Type II Portland Cement (ASTM C150) per cubic yard of concrete, 3/4 inch maximum size aggregate #67 (ASTM C33) and a water cement ratio not to exceed 0.48. Water in accordance with the requirements of ASTM C 94. Admixtures that do not contain calcium chloride and are in accordance with ASTM C 494 for concrete may be used. Admixtures shall be compatible with cement and other admixtures.

Concrete reinforcement: Steel reinforcing bars in accordance with ASTM A 615, Grade 60.

3.7.2 Manholes

Concrete, base, riser, conical top sections, flat slab tops, grade rings, and joint sealants between manhole sections shall all be in accordance with ASTM C 478. All concrete manhole components shall be precast, unless approved by the District. The minimum wall thickness shall be 5 inches. High Groundwater Manholes are required in all areas of high groundwater. (See Combination Air Valve/Vac and Manhole Details C-01 and C-02).

Lids, covers and slabs shall be designed for AASHTO HS-20 loading. Flat slab tops shall be a minimum of 8 inches thick. The opening through a flat slab top shall be a minimum of 36 inches in diameter. Manhole access opening shall be 24-inch diameter. Rings and Covers shall be heavy duty castings ASTM A 536 or gray cast iron per ASTM A 48. Manhole lid and frame shall be D&L A-1043 or approved equal. Cover shall be waffle pattern stamped “WATER.”

3.7.3 Vaults

Precast concrete vaults shall comply with ASTM C 857. All vault sections shall be precast, unless approved by the District. The minimum wall thickness shall be 5 inches. Lids, covers and slabs shall be designed for AASHTO HS-20 loading. Vault roof slabs shall be a minimum of 8 inches thick and the opening through the roof shall be a minimum of 36 inches in diameter. Precast vault walls shall be connected together by a plate and bolt type arrangement. Precast walls shall be appropriately secured to the floor slab.

3.7.4 Grade Beams

Grade beams shall be utilized on manhole installations on existing pipes or other installations requiring an open bottom. Grade beams shall be appropriately sized for the corresponding manhole diameter. For five foot (5’) diameter manholes, Grade Beams shall be eight feet (8’) long by 12” tall by 9” wide (8’ L x 12”T x 9” W) and shall be precast concrete in conformance with ASTM C478.

3.7.5 Manhole and Vault Appurtenances

Steps: manhole & vault steps shall be ASTM-478, comprised of grade 60 deformed rebar encased in a polypropylene copolymer plastic per ASTM D-14 01 with a tread width of 14 inches. The steps shall be M.A. Industries No. PS2-PF or PS2-PF-DF or equivalent. Steps shall be cast in place during manufacturing of the manhole & vault sections, and shall be six inches (6") from face of wall. The maximum distance from the rim of the manhole/vault to the top most step shall be 24 inches.

Joints: RUB’R-NEK or approved equal flexible gasket-type sealant of partially vulcanized butyl rubber per ASTM C990-09, AASHTO M-198 75 1, placed in all keyways between precast concrete adjusting ring and casting, individual precast concrete adjusting rings, and precast concrete adjusting ring and cone joints. A compatible primer or solvent as recommended by manufacturer of butyl base material shall be used to prepare surfaces prior to application of butyl base material and riser rings. Two gaskets shall be provided

on inner and outer lip of manhole or vault wall. For Manholes- the gasket shall have a minimum cross sectional area equivalent to one inch (1”) in diameter for 48” diameter manholes. Manholes larger than 48” require the use of 1 ½” diameter gaskets.

Pipe Penetrations: Penetrations through manhole risers and vault walls shall be cored or cast-in. All water pipe penetrations in manholes and vaults require modular mechanical seals with 316 stainless bolts, Link-Seal or equivalent. Utilize one (1) seal for concrete thickness less than 8 inches and two (2) seals for concrete 8 inch thick or greater. Install seals such that bolts are located on the accessible side of the penetration.

3.8 Casing Materials and Spacers

Mains to be installed inside casings shall be installed with self-restraining casing spacers. Casing spacers shall provide axial thrust restraint to prevent pipe joint deflection during and after installation. They shall also provide dielectric insulation between the carrier pipe and the casing and facilitate installation of the carrier pipe into the casing. See Waterline Casing Detail C-12. Pipe casing shall be smooth wall welded steel ASTM A-53 Grade B cylinder fabricated in accordance with AWWA C200. External loading shall be AASHTO HS-20 highway or railroad loading plus jacking load, E-80 railroad loading. Casing joints shall have ends beveled for field welding, be butt welded with complete joint penetration welds around the entire circumference of the pipe, and be formed and accurately manufactured so that when pipes are placed together and welded they form a continuous casing with a smooth and uniform interior surface. Interlocking joints shall be Permalok Interlocking Pipe Joining System.

Casing spacers shall be stainless steel, 2 piece bolt on style, minimum 14 gauge thickness and a minimum length of 11”; casing spacers shall be installed every 6 (six) feet of the pipeline to support the pipe barrel and the weight of its contents. The four runners shall be 11 inches long at a minimum and manufactured of high abrasion resistant, low coefficient of friction, glass filled polymer. Runner heights shall be set to center the carrier pipe in the casing. Risers shall be 10 gauge maximum, and the coating shall be fusion-bonded epoxy or heat fused PVC. Casing spacer models shall be Advance Products and Systems, Inc. SI-12; Pipeline Seal and Insulator, Inc. C12G or approved equivalent.

Casing end seals shall be performed and designed to prevent entry of water or loss of material from casing. The end seals shall be made of 1/8 inch thick 60 durometer EPDM or neoprene rubber held together with mastic strips to seal the edges. The seals shall overlap the casing pipe by 2 inches and shall be held on with AISI 304L stainless steel worm gear clamps. Casing end seals shall be Advance Products and Systems, Inc. AC or AW; Pipeline Seal and Insulator, Inc. C or W; or approved equivalent.

3.9 Tracer Wire

See Appendix E.

3.10 Automated Flushing Stations

Automated flushing stations, where permitted, shall be installed on dead end mains and shall be Kupferle Eclipse 9800, Mueller Hydroguard HG-4, HG-8 or approved equivalent.

Flushing station shall be self-draining, suitable for use in cold climates, and have a minimum bury depth of 7'. Flushing station shall include programmable operation, locking mechanism to prevent tampering, and water meter assembly. Flushing stations shall discharge to sanitary sewer, and shall include an approved backflow prevention device to prevent cross contamination of the water system.

SECTION IV – PIPE INSTALLATION AND INSPECTION

4.1 Safety

Job site safety shall be the responsibility of the contractor. The District Inspector may refuse to enter a jobsite if deemed unsafe by Occupational Health and Safety Act (OSHA) standards. Failure to provide a safe jobsite may result inability to conduct inspections.

4.2 Handling of Materials

Pipe and fittings shall be loaded and unloaded by lifting so as to avoid shock or damage. Under no circumstances shall such material be dropped. If, however, any part of the pipe is damaged, the replacement or repair of the damaged pipe shall be done to the satisfaction of the District. Any pipe or fittings that are not acceptable to the District shall be removed from the job site immediately. All pipe-handling equipment and pipe handling methods shall be in accordance with the methods and equipment recommended by the manufacturer.

Under NO circumstance shall forks be inserted into any pipe and or fitting. Pipe Storage-Pipe shall be stored and handled in accordance with manufacturer's recommendations. Any pipe with UV degradation or bowing may be rejected by the District Inspector. All pipe shall be stored with factory applied end caps intact.

4.3 Inspection

New installation, replacement, or repair of any existing facilities in the District's distribution system shall be inspected and approved by a District Inspector. The District Inspector shall ensure that the provisions of the Specifications are carefully complied with, particularly in regard to the quality of workmanship and materials. Problems that may require field judgment, in lieu of strict interpretation of the Specifications, shall be resolved by the Applicant to the satisfaction of the District Inspector.

All work shall be performed in accordance with accepted workmanship practices and the Specifications set forth and referenced herein. Any work not accepted by the District Inspector shall be redone until compliance with District Standard Specifications is achieved.

All appropriate permits and approved construction plans shall be kept on the job site during construction.

The District Inspector shall not supervise, set out work, or give line or grade stakes. A Representative of the Applicant shall be at the project site at all times that construction is in progress. The District Inspector shall discuss the work with the Applicant or Applicant's Representative only. Only the Applicant will give instructions to the project workers. If, at any time during construction, it is found that the Applicant's Representative is not on the project site, the District Inspector may stop work until the Applicant's Representative is present at the project.

All material used shall be subject to the inspection and approval of the District Inspector at all times. The District Inspector has the right to perform any testing deemed necessary to ensure compliance of the material with said Specifications. Failure on the part of the District Inspector to condemn or reject inferior materials, or work, shall not be construed to imply the District's acceptance should their inferiority become evident at any time prior to completion of a TWO-YEAR (2) warranty period from the date of "Construction Acceptance." Materials rejected by the District Inspector shall be immediately removed from the job site.

No construction shall commence sooner than three (3) business days after receipt of approved plans.

4.4 Inspection and Preparation of Pipe and Fittings

Before placing pipe in the trench, each pipe or fitting shall be thoroughly cleaned of all foreign material, kept clean at all times thereafter, and carefully examined for cracks and other defects before installation. Bell ends and spigot ends are to be free of defects. Following the inspection, end caps shall be replaced prior to placing the pipe in the trench.

All lumps, blisters and excess coatings shall be removed from the pipe and fitting, and the outside of the spigot and the inside of the bell shall be wiped clean, dry and free from oil and grease before the pipe or fitting is installed. Dirt and any other foreign material must be removed from the barrel of the pipe before installation.

4.5 Cutting and Fitting of Pipe

Pipe shall be cut in accordance with manufacturer's recommendations, whenever necessary, to conform to location of fittings, line, or grade. All cuts, when required, shall be straight, true and beveled and may be made with plastic pipe cutters or completed per the DIPRA Guidelines for Field Welding and Cutting Ductile Iron Pipe (August 2015). All burrs shall be removed from the ends of cut pipe and the ends of the pipe lightly rasped or filed.

4.6 Pipe Joints

All pipe joints shall be uniform and smooth transitions shall exist from joint to joint or fitting.

4.7 Pipe Alignment and Grade

Fittings, valves, and hydrants shall be installed at staked locations and elevations; spigots centered in bells; and all valve and hydrant stems plumb. The depth of cover over pipe, measured from finished grade to top of pipe, shall be a minimum of 7 feet. For main installations, a surveyor under the guidance of a Professional Land Surveyor registered in the State of Colorado shall set stakes for alignment and grade.

When installing pipe on horizontal or vertical curves, the intent is to install to the staked alignment. The pipe shall be kept in alignment by installing bends on the curve or deflecting the pipe at each joint. Pipe shall be assembled in a straight line both horizontally or vertically prior to deflection. Degree of deflection must be field verified prior to backfill and noted in Record Drawings.

Pipe shall be installed with the bell ends facing in the direction of installation, unless directed otherwise by the District. Where pipe is to be installed on a grade of 10 percent (%) or greater, the installation shall start at the bottom and shall proceed upward with the bell ends of the pipe up grade.

4.8 Temporary Plugs

Whenever the pipe is left unattended, temporary plugs shall be installed at all openings. Temporary plugs shall be designed to prevent water, debris, children, and animals from entering the pipe. The Contractor shall provide all temporary plugs. The temporary plug shall be secured in a fashion that it cannot be lost in the pipeline.

4.9 Frost

No pipe or appurtenant structure shall be installed upon a foundation into which frost has penetrated, or if at any time there is danger of ice formation. No pipe or appurtenant structure shall be installed unless backfilling can be completed before the formation of ice and frost.

4.10 Lowering of Material into Trench

Proper implements, tools and facilities satisfactory to the District shall be provided and used by the Contractor for the safe and convenient performance of the work. All pipe, fittings, valves, and hydrants shall be carefully lowered into the trench piece by piece by means of suitable tools or equipment, in such a manner as to prevent damage to main materials and their protective coatings and linings. Under no circumstances shall main materials be dropped or dumped into the trench.

If damage occurs to any pipe, fitting, valves, hydrants or water main accessories in handling, the District inspector may reject damaged material at their sole discretion.

4.11 Installation of Pipe

4.11.1 General

Factory applied end caps shall remain installed on the pipe while it is being placed in the trench to prevent foreign material from entering the pipe. The end cap shall be left in place until the connection is to be made to the adjacent pipe. During installation operations, no debris, tools, clothing or other foreign materials shall be placed in the pipe.

As each length of pipe is placed in the trench, the spigot end shall be centered in the bell and the pipe inserted to the manufacturer’s recommended depth with a slow steady pressure without jerky or jolting movements and brought to correct line and grade. The pipe shall be secured in place with bedding material tamped under it, except at the bells.

Precautions shall be taken to prevent dirt from entering the joint space. No wooded blocking shall be left at any point under the pipeline. All pipe joints shall be uniform and smooth transitions shall exist from joint to joint or fitting.

4.11.2 Ductile Iron Pipe

Push-On Joint

The inside of the bell, the outside of the spigot end, and the rubber gasket shall be thoroughly cleaned to remove oil, grit, excess coating, and other foreign matter. The rubber gasket shall be flexed inward and inserted into the gasket recess of the bell socket. NSF-61 approved gasket lubricant shall be applied to the inside face of the gasket and the spigot end of the pipe, per the manufacturer's recommendation.

The spigot end of the pipe shall be placed in the bell end with care to prevent the joint from contacting the ground. Pipe furnished without a depth mark on the spigot end shall be marked before assembly to ensure insertion to the manufacturer's recommended depth. The pipe shall be kept in straight alignment and the joint shall be completed by inserting the pipe to the manufacturer's recommended depth with a slow, steady pressure by using a long pry bar, jack, lever puller, or backhoe bucket. A timber header should be used between the pipe and the jack or backhoe bucket to avoid damage to the pipe.

Upon completion of joining push-on joint pipe, an inspection shall be made to ensure that the gasket is correctly aligned in the gasket recess of the bell socket and not twisted or turned.

Joint bonding is to be provided at all push on joints using integral tabs on new pipe, or Cadweld where necessary. All joints shall have a Cadweld installed using a number four (4) gauge solid copper wire or the manufacturer's provided bonding strap. Cadwelds shall be installed in accordance with the manufacturer's recommended application/procedure.

Mechanical Joint Fittings and Pipe

Before joining mechanical joint ductile iron fittings to cast iron, ductile iron, or PVC pipe, the outside of the spigot, the inside of the bell and the rubber gasket shall be thoroughly cleaned to remove oil, grit, excess coating, and other foreign matter. The rubber gasket shall be flexed inward and inserted into the gasket recess of the bell socket. NSF-61 approved gasket lubricant shall be applied to the inside face of the gasket and the spigot end of the pipe, per the manufacturer's recommendation.

The ductile iron gland shall be slipped on the spigot end of the pipe with the lip extension of the gland toward the socket, or bell end. The rubber gasket shall be placed on the spigot end with the thick edge toward the gland.

The pipe shall be pushed in to the bell to the manufacturer's recommended depth. The gasket shall then be pressed into place within the bell evenly around the entire joint. The ductile iron gland shall be moved along the pipe into position for bolting; the bolts inserted and the nuts screwed finger tight, then tightened with a torque-limiting wrench. Torque for the various sizes of bolts shall be as follows:

Table C-2: Torque and Bolt Size

Pipe Diameter (inches)	Bolt Size (inches)	Range of Torque (Foot-Pounds)
4 - 24	5/8”	75 - 90
30 - 36	3/4”	100 – 120

Nuts spaced 180 degrees apart shall be tightened alternately in order to produce equal pressure on all parts of the gland.

Marking Tape

The installation of blue marking tape is required on all water mains and service lines. The tape shall be installed approximately 24-inches (24") above the main or line. The tape shall meet the specifications listed in 3.5.

4.12 Installation of Valves

Valves shall be handled in such a manner as to prevent any injury or damage. All joints shall be thoroughly cleaned before installation.

Valves shall be set and joined to the pipe in the manner previously specified for cleaning, installing and joining push-on and mechanical joint pipe. Valves shall be set in such a manner that the valve stems are plumb. Valves shall be wrapped with polyethylene encasement material in accordance with 3.2.10.

8-inch and larger valves should be provided with support, crushed stone or a thoroughly tamped trench bottom (95% Standard Proctor Density per AASHTO T99).

Valves shall be operated prior to installation to ensure good operating condition.

4.12.1 Valve Box Installation

A valve box shall be provided for every valve. The valve box shall not transmit shock or stress to the valve, and shall be centered and plumb over the operating nut of the valve, with the box cover set to the required elevation. It will be the responsibility of the Applicant to insure that valve boxes are plumb and raised to finish grade elevation.

4.12.2 Installation of Fittings

All buried fittings in the system shall be mechanical joint applications and joined per 4.11-2b.

4.13 Fire Hydrants

4.13.1 Installation

Fire Hydrants shall be installed in conformance with drawing C-08. The location of all hydrants shall be staked. Final location and grade shall be in accordance with the approved drawings and care shall be taken to set hydrant grade-line marking at the finished grade elevation. Offset stakes not farther than 12 feet from the fire hydrant are acceptable. All hydrants shall stand plumb.

Each hydrant shall be connected to the main by a six-inch (6") branch line. An independent six-inch (6") gate valve shall be installed on the tee off of the water main. The six-inch (6") branch line servicing the fire hydrant shall not be longer than 50 feet. If the length of the branch line extends beyond 50 feet, an eight-inch (8") main with an eight-inch (8") by six-inch (6") concentric reducer shall be used from the main until a point 50 feet from the hydrant is reached. At that point, a six-inch (6") branch line may be extended to the fire hydrant.

No service line connections shall be installed between the fire hydrant and the fire hydrant guard valve, or anywhere on the six-inch (6") branch line servicing the fire hydrant.

4.13.2 Anchorage

The shoe of each hydrant shall be well braced against the un-excavated earth at the end of the trench with a concrete thrust block. Care shall be taken not to cover the weep holes with concrete and bond breaker shall be installed between the concrete thrust block and the hydrant. Hydrants and branch lines shall be wrapped with polyethylene encasement material in accordance with 3.2.10. The bottom of the hydrant bowl and the hydrant valve shall be supported with minimum 18 x 8 x 4- inch precast concrete blocking slabs or a District approved equal. The hydrant assembly shall require megalug or other approved joint restraints.

4.13.3 Drainage

Wherever a hydrant is set, drainage shall be provided at the base of the hydrant by placing approved rock material from the bottom of the trench, to at least 12 inches above the barrel flange of the hydrant, as shown on the typical fire hydrant detail. The minimum distance from the bottom of the trench to the bottom of the hydrant elbow shall be six inches (6"). The minimum of approved uniformly graded gravel, cobble, or crushed rock placed therein shall be 1 cubic yard.

4.13.4 Clearances

The minimum clearances around all fire hydrants shall be: ten feet (10') in the front, seven feet (7') on the sides, four feet (4') on the back, and 20 feet above except where bollards are required.

4.13.5 Operation of Fire Hydrant

The required operational position of a fire hydrant is either fully opened or fully closed. The guard valve shall control any restriction of flow. The restriction of flow, through a fire hydrant, by means of the "operating nut" is strictly prohibited.

4.14 Thrust Blocks and Anchors

4.14.1 Installation

Thrust blocks and/or anchors shall be constructed at all bends, tees, plugs, fire hydrants, and fittings that require reaction support due to unbalanced line thrust. Thrust blocks are to be used in addition to joint restraint. Care shall be taken not to block outlet or to cover bolts, nuts, clamps, or other fittings or to make them inaccessible. Wrap fittings with polyethylene prior to pouring thrust blocks so that concrete does not come in contact with the joint bolts. Thrust blocks shall be installed so all joints are accessible. Bearing surface areas are minimum areas to bear against the undisturbed trench wall. In every instance, the thrust block or anchor shall bear against undisturbed earth or compacted structural fill.

All debris, water or ice shall be removed from the place to be occupied by the concrete. Concrete shall not be placed on frozen subgrade.

4.14.2 Form Work for Thrust Blocks and Anchors

All concrete thrust blocks and anchors shall be formed. Refer to Concrete Thrust Block details C-03, C-04 and C-05 and Anchor Detail C-10. A plastic bond-breaker must be provided around all portions of the main to keep concrete from adhering to pipe and fittings.

No thrust block shall be smaller than that size required for an eight-inch (8") main fitting.

4.14.3 Concrete and Curing Time

Thrust block and anchor block concrete shall be per Materials Specification Section 3.6.

Minimum curing time prior to line pressurization for concrete thrust blocks and anchors regardless of additives shall be 36 hours for placed concrete containing two (2) cubic yards or less, 48 hours for placed concrete containing more than two (2) cubic yards but less than six (6) cubic yards, and 72 hours for placed concrete containing more than six (6) cubic yards but less than 12 cubic yards. Protect against loss of moisture, rapid temperature change, from rain, and flowing water for not less than curing time from the placement of the concrete.

No water main will be charged or pressurized without the approval of the District. All thrust blocks and anchors must meet the minimum curing time.

4.14.4 Compaction of Fill Over Thrust Blocks and Anchors

Backfill may be placed over thrust blocks and anchors once the surface has set sufficiently to resist the weight of the backfill and compaction.

4.14.5 Mechanical Joint Restraints

Mechanical Joint Restraints (Megalugs or approved equal) shall be used in conjunction with all thrust blocks as described in Section 4.11.2b.

4.15 Air Vac Vaults

The installation of Air Vac Vaults shall be in conformance with Details C-01 and/or C-02. All dimensions, locations and elevations shall be coordinated and submitted by the Applicant and Contractor and meet the District requirements.

4.16 Tie in to the District System

4.16.1 Tie-ins

Tie-ins shall be inspected and approved by the District. Under no circumstances shall a non-disinfected main, which cannot be isolated, be tied into an existing distribution main in service.

4.16.2 Tapping Existing Mains

Main Line Tie-ins:

Unless otherwise approved by the District, all main line tie-ins shall be made by means of a tee.

Service Taps/Stub outs:

During new main line construction, service line stub outs and service line taps may only be installed by the Contractor after hydrostatic pressure and bacteriological tests have been completed and approved by the District. Stub outs shall terminate at the curb stop valve. Curb stop valves shall be installed at the property line or edge of easement. The minimum separation distance between service line taps on the main shall be 18 inches. No service line “dry taps” are allowed. Service line “wet taps” will only be allowed after the line has passed the entire District required inspections and tests. The main line Contractor shall perform “wet taps” on all newly constructed lines. Water taps shall be made above the spring line of pipe. Spring line is defined as the horizontal mid-line of any main line.

All tees/taps shall be witnessed and approved by the District. Any tap preformed without a District inspection and approval shall be considered "illegal system tampering" and subject to a one thousand dollar ($1,000) fine.

4.16.3 Service Stub Outs

When Water Service Stub Outs are installed in conjunction with the installation of the Water Main, the stub out shall be valved off and plugged, water tight, with a valve box, the top of which is installed at the ground surface, and located by a surveyor. A copy of the

lot plan showing the Stub Out locations shall be provided to the District for inspection and location verification. Electronic survey points shall be provided to the District in a format compatible with the District's GIS mapping system or Geo Referenced CAD drawing. Stub Outs shall not be buried prior to inspection by the District.

4.16.4 Operation of Valves

When tying in to the District system, it may be necessary to operate existing District valves. Only District personnel will operate valves on the District system. The Contractor shall give the District Inspector 48 hours' notice to arrange for operating valves. Both the Contractor and the District Representative shall be present when the valves are operated.

4.16.5 Interruption of Service

Installation of a connection that will require closing existing valves may cause an interruption of water service to existing District customers. The Contractor shall coordinate all shut downs at least one week in advance with the District Inspector. The Contractor will be responsible to furnish the District all necessary information as to the date and time that the interruption will begin and the total time required to complete the installation.

Notification: The District will deliver written notice to all affected customers at least 48 hours prior to the proposed shut down. The notice shall state the date, time, and probable duration of shutdown, the name and telephone number of the Contractor, District, and District Inspector.

The local fire department for the affected area will also be notified 48 hours in advance. A description of the boundaries of the affected area and the location of all fire hydrants in that area will be provided to the fire department.

If, in the process of installing a connection, there exists an industry or building in the area that cannot be out of water, such as a hospital, or other special customers, appropriate means shall be taken to provide and convey water. The District shall approve water conveyance in writing.

The District reserves the right to schedule water system shut downs that will provide the least inconvenience to the general public.

Tie-In Procedures: Water line tie-in trenches shall be excavated on the day prior to shutdown unless otherwise approved by the District Inspector. The pre-excavated tie-in trench shall be shored and covered with a steel plate to provide temporary surfacing. All required pipeline tie-in materials shall be delivered to the site prior to the shutdown.

SECTION V – TESTING AND ACCEPTANCE

5.1 General Requirements

The following procedures shall apply to all main extensions within the District service area. Pipe extensions shall be chlorinated in accordance with AWWA C600 and C651 Standard for Disinfecting Water Mains, most recent version.

Immediately after main line installation, the Contractor, in the presence of a District inspector, shall conduct a High Chlorine Test, a Low Chlorine Test, two Bacteriological Tests twenty four (24) hours apart, and then a pressure test of the main line to ensure that the line is not leaking. No more than 1,000 feet of line shall be tested at one time. If it is discovered that the main line is leaking, it shall be the responsibility of the Applicant to make all necessary repairs and retest the main line. No tap shall be made on to the main line until Construction Acceptance has been granted for the main.

The specific tests required by the District are listed on the "Water System Acceptance Procedure Form". The form is available in Section VII.

Before the end of the TWO-YEAR (2) warranty period, the District will sound, an acoustical method of leak detection, the main line at working pressure to ensure that the main line is not leaking. The cost of this testing will be borne by the District. If it is discovered that the main line is leaking, it will be the responsibility of the Applicant to make all necessary repairs and retest the main line and services to the curb stops in the presence of a District Inspector.

5.2 Tracer Wire Testing

All new trace wire installations shall be located using typical low frequency (512Hz) line tracing equipment, witnessed by the contractor, engineer and facility owner as applicable, prior to acceptance of ownership. This verification shall be performed upon completion of rough grading and again prior to final acceptance of the project. Continuity testing in lieu of actual line tracing shall not be accepted.

5.3 Disinfection

Disinfecting by chlorination of the pipe shall be performed prior to acceptance by the District. Before beginning the disinfection process, the pipe shall be clean and free of debris to the satisfaction of the District. The chlorinating agent, and method of application, shall be in accordance with AWWA C651. The Contractor shall provide all material for disinfecting of water mains.

Calcium hypochlorite granules shall be placed at the upstream end of the first section of pipe, at the upstream end of each branch main, and at 500-foot intervals. The quantity of granules shall be as shown in the table below.

The District does not allow the use of calcium hypochlorite tablets due to the cold water and the time it takes to completely dissolve the tablets.

TABLE C-3: Calcium Hypochlorite Granules

To be placed at the beginning of main and at each 500-foot interval.	
Pipe Diameter	**Ounces**
6"	3.8
8"	6.7
10"	10.5
12”	15.1
14" and larger	D^2 x 15.1* *D = diameter in feet

After the pipe is filled with water and chlorine, the chlorinated water shall be held in contact with the pipe for 24 hours or if the water temperature is less than 41°F, the chlorinated water shall remain in the pipe for at least 48 hours. A detectable free chlorine residual (≥0.2 mg/L) shall be found at each sampling point after the 24 or 48 hour period. The pipeline shall then be thoroughly flushed to remove the heavily chlorinated water and/or debris. Care shall be taken in flushing the pipeline to prevent property damage and danger to the public. Discharge of highly chlorinated water shall not be released directly to any stream, watercourse or sanitary sewer. The environment to which the chlorinated water is to be discharge shall be inspected. If there is any possibility that the chlorinated discharge will cause damage to the environment, sodium thiosulfate shall be applied to the water to be wasted to neutralize the residual chlorine. Refer to ANSI/AWWA C655 Field Dechlorination for dechlorination procedures if required.

After chlorination, the water shall be flushed from the line at its extremity until the replacement water is equal, chemically and bacteriologically to those of the permanent source of supply (shall be between 0.42 mg/L and 2.0 mg/L residual chlorine).

After flushing and an acceptable chlorine residual is recorded in the new main, a set of bacteriological samples shall be collected from every 1,000 feet of the new water main, plus one set from the end of the line and at least one set from each branch. The samples will be deposited in the laboratory for a 24-hour incubation period. If the results from the first set of bacteriological samples indicate no biological activity, a second set from the same locations shall be collected. If the second set of samples also shows no bacteriological activity, the line is considered to be disinfected. Testing of residual chlorine and bacteriological sampling and testing will be done by the District.

If the initial disinfection fails to produce satisfactory bacteriological results, the new main shall be re-flushed and shall be re-sampled. If check samples also fail to produce acceptable results, the main shall be re-chlorinated until satisfactory results are obtained. The re-sampling and disinfection will be performed at the developer’s expense.

If the “continuous feed method” or the “slug method” of chlorination is used, the Contractor is to provide the written procedure to the District Inspector for acceptance of the method at least 48 hours prior to starting the work.

No main, which has been disinfected and flushed, shall stand stagnant for more than 15 days without being re-flushed and a new disinfecting test performed, passed, and approved by the District.

5.4 Hydrostatic Pressure Testing

5.4.1 General

Contractor shall conduct pressure and leakage tests on all newly installed main in the presence of a District Inspector per AWWA 600, 604, and 605 for ductile iron, steel and PVC pipe respectively. Test sections shall not exceed 1,000 feet, unless approved by the District Inspector.

Contractor shall furnish the following equipment and materials for tests, unless otherwise directed by the District Inspector:

(a)	Two (2):	Five (5) Gallon Buckets
(b)	Two (2):	Pressure gauges, with maximum five (5) psi increments
(c)	One (1):	Suitable pump, hose, and suction pipe as required

5.4.2 Testing Procedure

Following the installation of any new main, pipe shall be partially backfilled leaving all fittings, valves, hydrants, and joints exposed for examination of leaks. Pressure test shall not be conducted until minimum concrete cure time for thrust blocks and anchors has occurred in accordance with Section 4.14.3. The test section shall be slowly filled with water to completely expel any trapped air through valves or additional corporation stops at high points as needed. Following air removal, the pipe shall be held at operating pressure to stabilize any line movement that may occur after installation under pressurization. Once the inspector has verified stabilization and examined the pipe for initial leaks, pipe may be pressurized to testing pressure. Refer to pipe material specific AWWA procedure (600, 604, and 605). The specified test pressure shall be 1.5 times greater than the working pressure of the pipe, not to exceed a maximum of 250 psi corresponding to pressure at the lowest elevation of the system. Hydrostatic testing pressure of steel pipe requires verification and approval by the inspector. Test pressure must be maintained within a plus or minus 5 psi variance for a two (2) hour duration by adding makeup water to the pipe. The amount of makeup water shall be accurately measured and shall not exceed the maximum allowable as shown in material-specific tables of AWWA 600, 604, and 605.

5.5 Acceptance of Mains and Release for Taps

A new main shall be accepted by the District and released for taps when Construction Acceptance has been achieved. Construction Acceptance procedures and requirements are detailed in the Rules and Regulations, Article IX.

5.6 Vacuum Testing of High Groundwater Air Vac Vaults

Manhole vacuum testing shall be required on all high groundwater air vac vaults. Refer to Appendix D, Section 5.3.

SECTION VI – STANDARD FORMS AND DETAILS

Form C1: Pre-Construction Checklist for Water Mainline Installations

Form C2: Water System Acceptance Procedure

Form C3: Bill of Sale Two Rivers Metro District – Water Main

Form C4: Water Easement – Two Rivers Metro District

Form C5: Lender's Consent

C-01: Combination Air Valve/Vacuum Valve + Manhole

C-02: Combination Air Valve/Vacuum Valve + Manhole (High Groundwater)

C-03: Concrete Thrust Blocks

C-04: Parallel Bends

C-05: Vertical Thrust Block

C-06: Tee Detail

C-07: 90° Cross Detail

C-08: Fire Hydrant Assembly

C-09: Gate Valve and Box Assembly

C-10 Anchor Block Cutoff Collar

C-11: Groundwater Barrier

C-12: Waterline Casing Detail

C-13: Polyethylene Wrap

C-14: Minimum Cover and Culvert Crossing Insulation Detail

C-15: Easement Width Detail

C-16: Fire Hydrant Clearances and Bollards

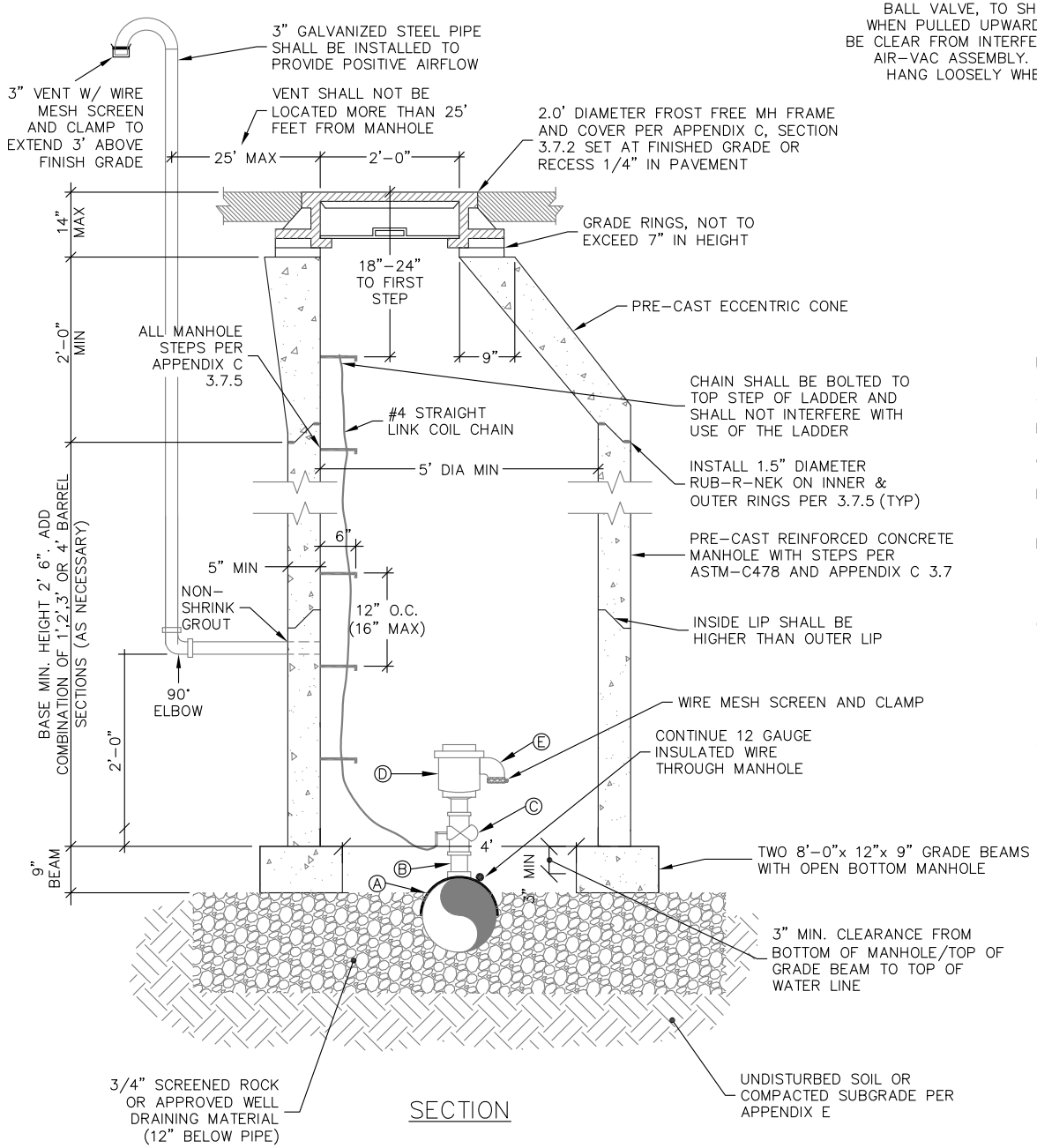

SECTION

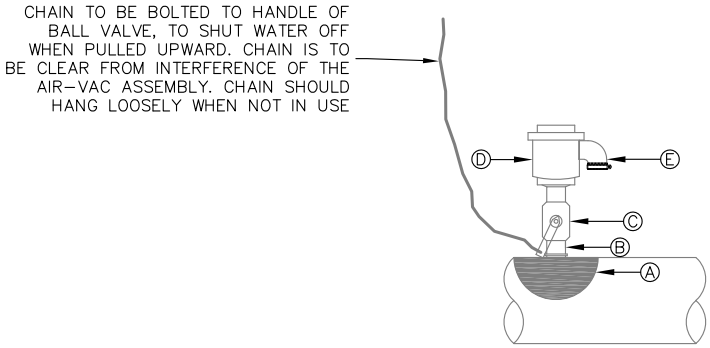

SIDE DETAIL

LEGEND

A. TAPPING SADDLE PER APPENDIX B

B. THREADED BRASS NIPPLE BASE

C. FEMALE-FEMALE THREADED BRASS BALL VALVE

D. THREADED INLET ARI D-040 AIR AND VACUUM RELEASE VALVE PER APPENDIX C, 3.3.3

E. DISCHARGE ELBOW

GENERAL NOTES

1. ALL CONCRETE WORK SHALL COMPLY WITH LATEST ACI-318 SPECIFICATIONS.
2. AIR VALVE ASSEMBLY LARGER THAN 2" SIZE SHALL BE SPECIALLY DESIGNED AND MEET WATER DISTRICT REQUIREMENTS.
3. THIS INSTALLATION WITH THE CHAIN SHALL ENABLE ISOLATING A DEFECTIVE AIR-VAC WITHOUT SHUTTING OFF THE MAIN.
4. PROVIDE THERMAL PROTECTION JACKET OVER ARV ASSEMBLY

EAGLE RIVER WATER & SANITATION DISTRICT
846 FOREST ROAD
VAIL, CO 81657
(970) 476-7480
WWW.ERWSD.ORG

COMBINATION AIR/VAC VALVE & MANHOLE (NO GROUNDWATER)			
DRAWN BY:	JEC	DATE:	03/01/2017
SCALE:	NONE	REV:	1/21/2020
C-01			

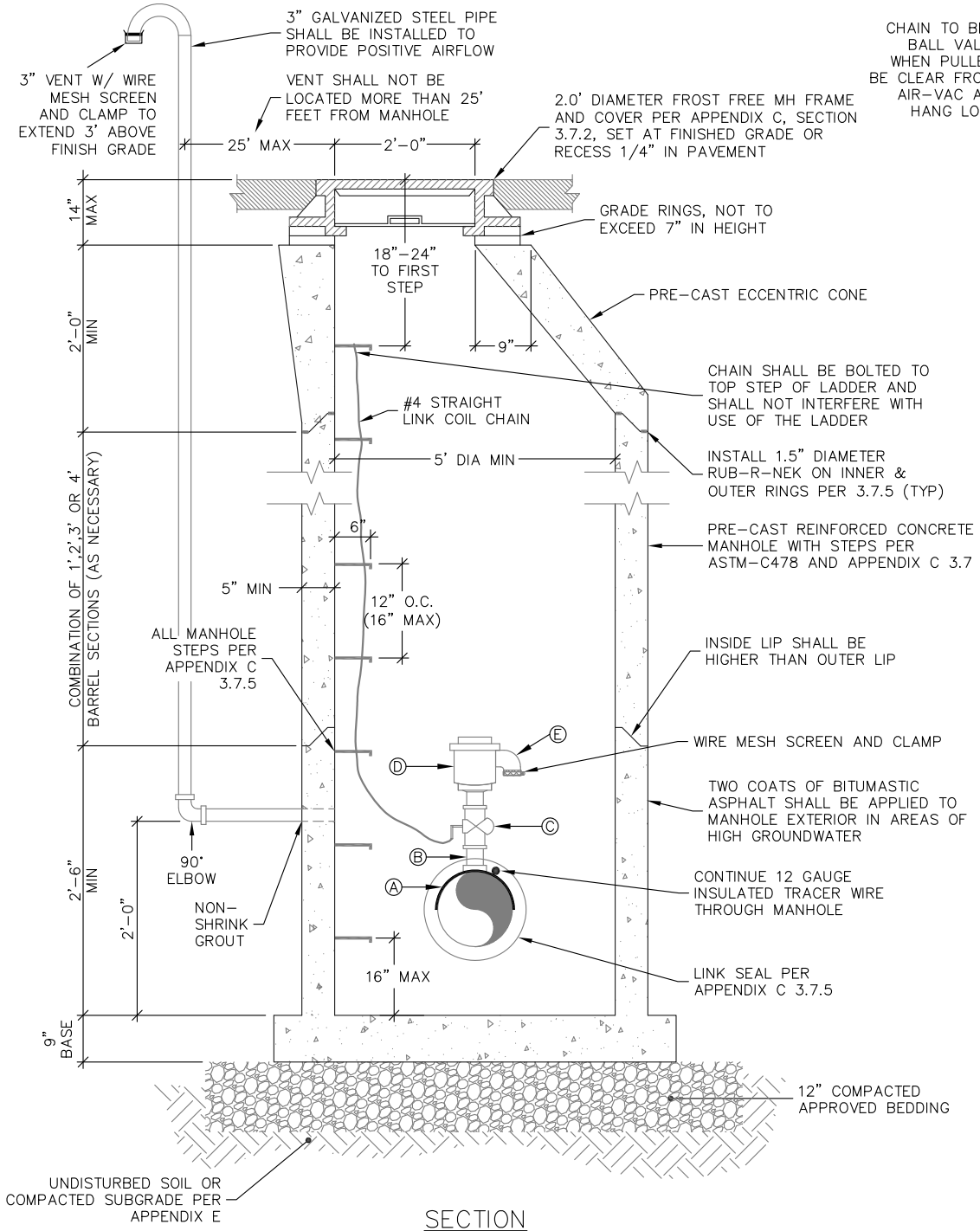

SECTION

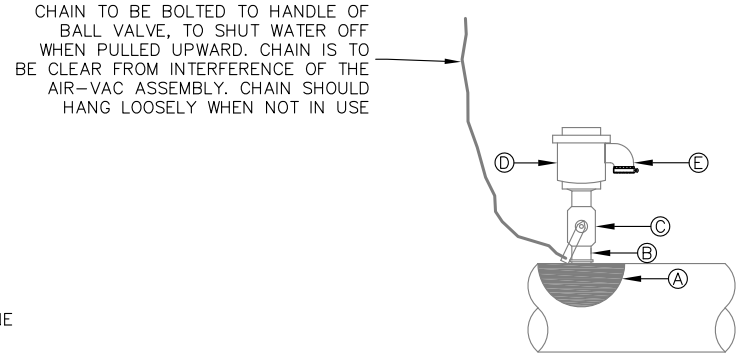

SIDE DETAIL

LEGEND

A. TAPPING SADDLE PER APPENDIX B

B. THREADED BRASS NIPPLE BASE

C. FEMALE-FEMALE THREADED BRASS BALL VALVE

D. THREADED INLET ARI D-040 AIR AND VACUUM RELEASE VALVE PER APPENDIX C, 3.3.3

E. DISCHARGE ELBOW

GENERAL NOTES

1. ALL CONCRETE WORK SHALL COMPLY WITH LATEST ACI-318 SPECIFICATIONS.
2. AIR VALVE ASSEMBLY LARGER THAN 2" SIZE SHALL BE SPECIALLY DESIGNED AND MEET WATER DISTRICT REQUIREMENTS.
3. THIS INSTALLATION WITH THE CHAIN SHALL ENABLE ISOLATING A DEFECTIVE AIR-VAC WITHOUT SHUTTING OFF THE MAIN.
4. MANHOLE MAIN SHALL BE WATERTIGHT/SEALED
5. WATER MAIN SHALL HAVE WATERTIGHT PIPE TO MANHOLE SEAL WHERE IT ENTERS AND EXITS THE MANHOLE PER APPENDIX C, 3.7.5.
6. PROVIDE THERMAL PROTECTION JACKET

EAGLE RIVER WATER & SANITATION DISTRICT
846 FOREST ROAD
VAIL, CO 81657
(970) 476-7480
WWW.ERWSD.ORG

COMBINATION AIR/VAC VALVE & MANHOLE (HIGH GROUNDWATER)			
DRAWN BY:	JEC	DATE:	03/01/2017
SCALE:	NONE	REV:	1/21/2020
C-02			

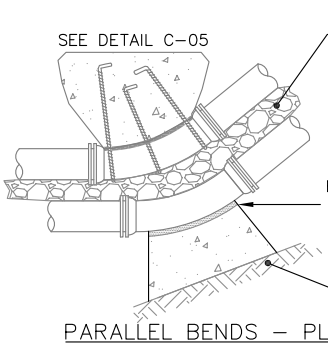

PARALLEL BENDS – PLAN
(HORIZONTAL)
SEE C-04 PARALLEL BENDS DETAIL

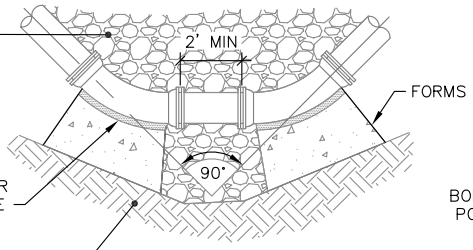

DOUBLE 45° BENDS TO COMPLETE A 90° TURN

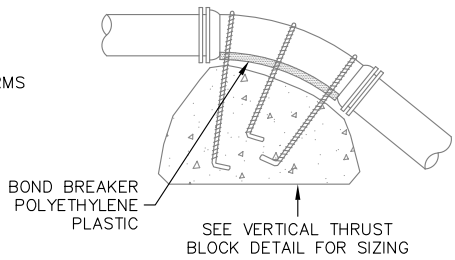

VERTICAL THRUST BLOCK – SECTION
SEE DETAIL C-05

THESE DETAILS ARE TO BE FOLLOWED FOR EVERY FITTING IN THE INSTALLATION

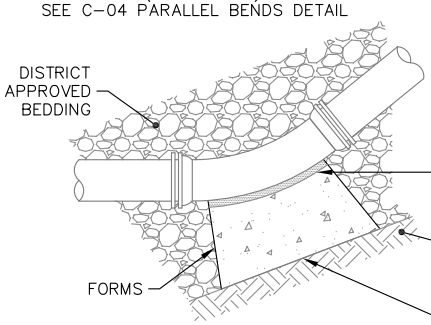

BEND – PLAN

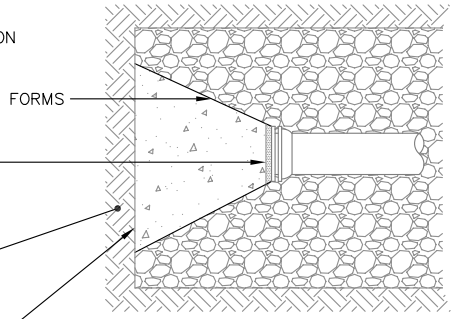

DEAD END – PLAN

BOND BREAKER POLYETHYLENE PLASTIC
UNDISTURBED EARTH
MINIMUM BEARING SURFACE AREA SQ. FT

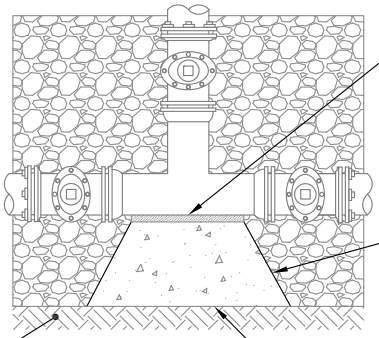

TEE – PLAN

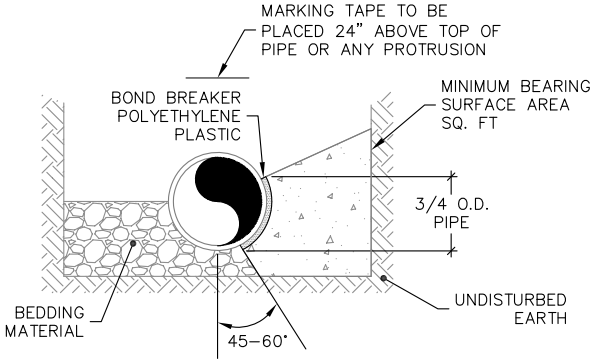

TYPICAL CROSS SECTION

GENERAL NOTES

1. MEGALUGS SHALL BE USED IN CONJUNCTION WITH ALL FITTINGS THAT REQUIRE THE USE OF THRUST BLOCK.
2. REFER TO DISTRICT STANDARDS IN APPENDIX C SECTION 3.6 FOR REQUIREMENTS.
3. THRUST BLOCKS SHALL BE INSTALLED SO THAT ALL JOINTS ARE ACCESSIBLE. POLYWRAP FITTINGS PRIOR TO POURING THRUST BLOCK, EXTEND WRAP TO ENCLOSE ALL FITTINGS AND BOLTS.
4. THRUST BLOCKS SHALL BE FORMED AGAINST UNDISTURBED SOIL & FORMS PER APPENDIX C 4.14.
5. BLOCK HEIGHT SHALL BE ESTABLISHED SUCH THAT THE CALCULATED BLOCK WIDTH IS BETWEEN ONE AND TWO TIMES THE HEIGHT.
6. BOND BREAKER PER APPENDIX C 3.2.10.

	REQUIRED MINIMUM BEARING SURFACE AREA (SF)					
	SIZE OF PIPE	BENDS				TEE OR DEAD END
		11-1/4°	22-1/2°	45°	90°	
200 PSI WORKING	4"-8"	1.2	2.5	4.8	8.9	6.3
	10"	1.9	3.8	7.5	13.9	9.8
	12"	2.8	5.5	10.8	20.0	14.1
	16"	4.9	9.8	19.2	35.5	25.1
	18"	6.2	12.4	24.3	45.0	31.8
	20"	7.7	15.3	30.1	55.5	39.3
	24"	11.1	22.1	43.3	80.0	56.5

THE MINIMUM BEARING SURFACE AREAS ARE PROVIDED FOR 200 PSI WORKING PIPE PRESSURE + 50 PSI SURGE (250 PSI TOTAL) AND 2,000 PSF SOIL BEARING CAPACITY. IF PRESSURE IS HIGHER OR SOIL BEARING POTENTIAL LOWER, CONSULT DISTRICT.

	REQUIRED MINIMUM BEARING SURFACE AREA (SF)					
	SIZE OF PIPE	BENDS				TEE OR DEAD END
		11-1/4°	22-1/2°	45°	90°	
250 PSI WORKING	4"-8"	1.5	2.9	5.8	10.7	7.5
	10"	2.3	4.6	9.0	16.7	11.8
	12"	3.3	6.6	13.0	24.0	17.0
	16"	5.9	11.8	23.1	42.7	30.2
	18"	7.5	14.9	29.2	54.0	38.2
	20"	9.2	18.4	36.1	66.6	47.1
	24"	13.3	26.5	51.9	96.0	67.9

THE MINIMUM BEARING SURFACE AREAS ARE PROVIDED FOR 250 PSI WORKING PIPE PRESSURE + 50 PSI SURGE (300 PSI TOTAL) AND 2,000 PSF SOIL BEARING CAPACITY. IF PRESSURE IS HIGHER OR SOIL BEARING POTENTIAL LOWER, CONSULT DISTRICT.

EAGLE RIVER WATER & SANITATION DISTRICT
846 FOREST ROAD
VAIL, CO 81657
(970) 476-7480
WWW.ERWSD.ORG

CONCRETE THRUST BLOCKS

DRAWN BY:	JEC	DATE:	03/01/2017
SCALE:	NONE	REV:	1/21/2020

C-03

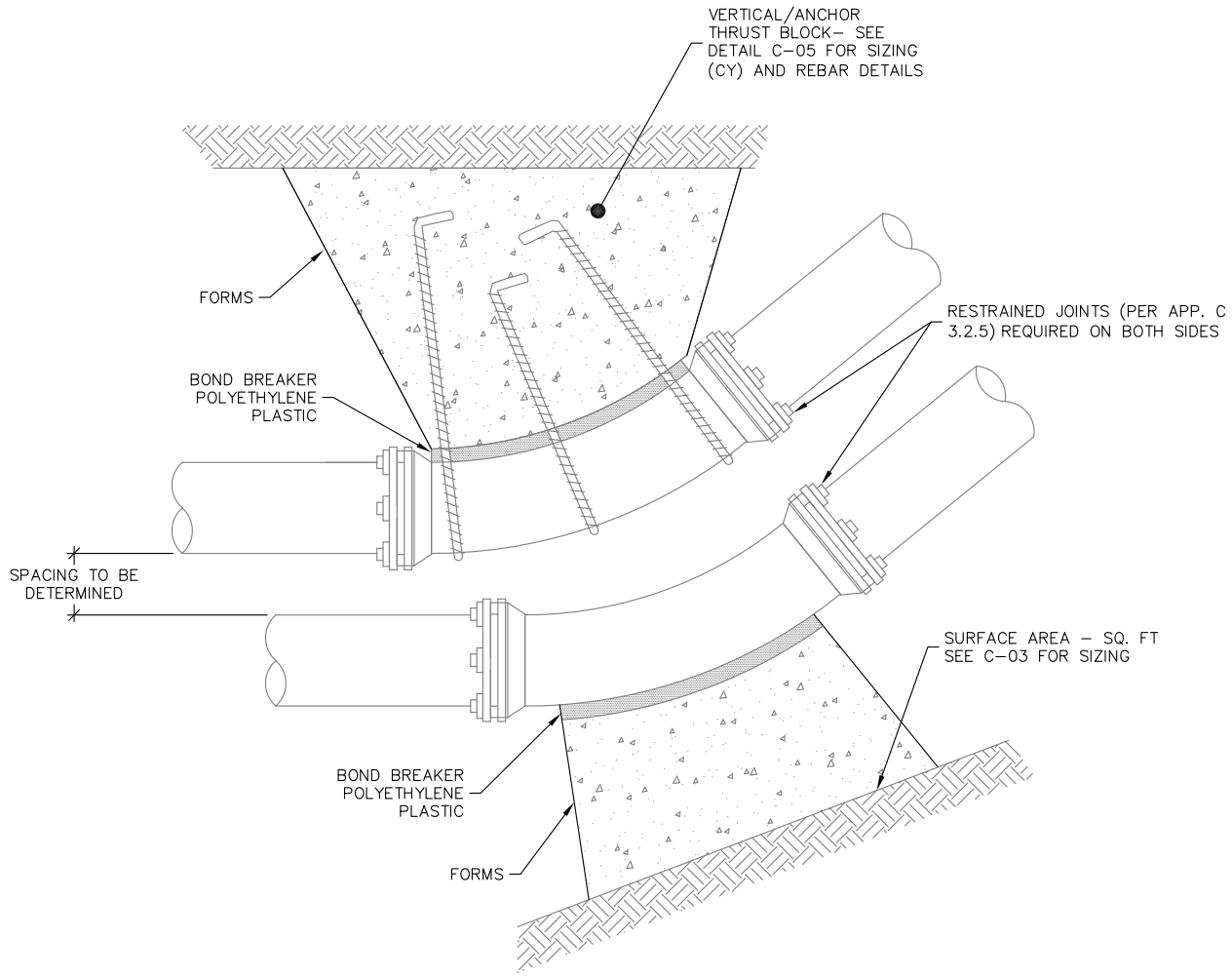

HORIZONTAL PARALLEL BENDS
TOP VIEW

GENERAL NOTES

1. USE MEGALUG JOINT RESTRAINT DEVICES PER 3.2.5 OR SIMILAR UPON PRIOR DISTRICT APPROVAL – POLY–WRAPPED PIPE TO SERVE AS BOND BREAKER (NOT TO INTERFERE WITH RESTRAINED JOINTS). ALL SURFACES OF THE RESTRAINED JOINTS SHALL BE ACCESSIBLE AND FREE FROM INTERFERENCE DUE TO THRUST BLOCK CONSTRUCTION.
2. MINIMUM AREA REQUIRED WILL BE THAT OF AN 8 INCH MAIN. PIPE LARGER THAN 12" TO BE SPECIFICALLY DESIGNED BY ENGINEER.
3. ALL THRUST BLOCKS SHALL BE FORMED. FORMS PER 3.6.4.
4. BEARING AREA BASED ON SOIL BEARING PRESSURE OF 2000 LB/SF.
5. SEE DETAIL C–05 FOR VERTICAL/ANCHOR THRUST BLOCK.
6. POLYETHYLENE BOND BREAKER PER APPENDIX C 3.2.9.

EAGLE RIVER WATER & SANITATION DISTRICT
846 FOREST ROAD
VAIL, CO 81657
(970) 476-7480
WWW.ERWSD.ORG

PARALLEL BENDS W/THRUST BLOCKS

DRAWN BY:	JEC	DATE:	03/01/2017
SCALE:	NONE	REV:	1/21/2020

C–04

CROSS SECTION

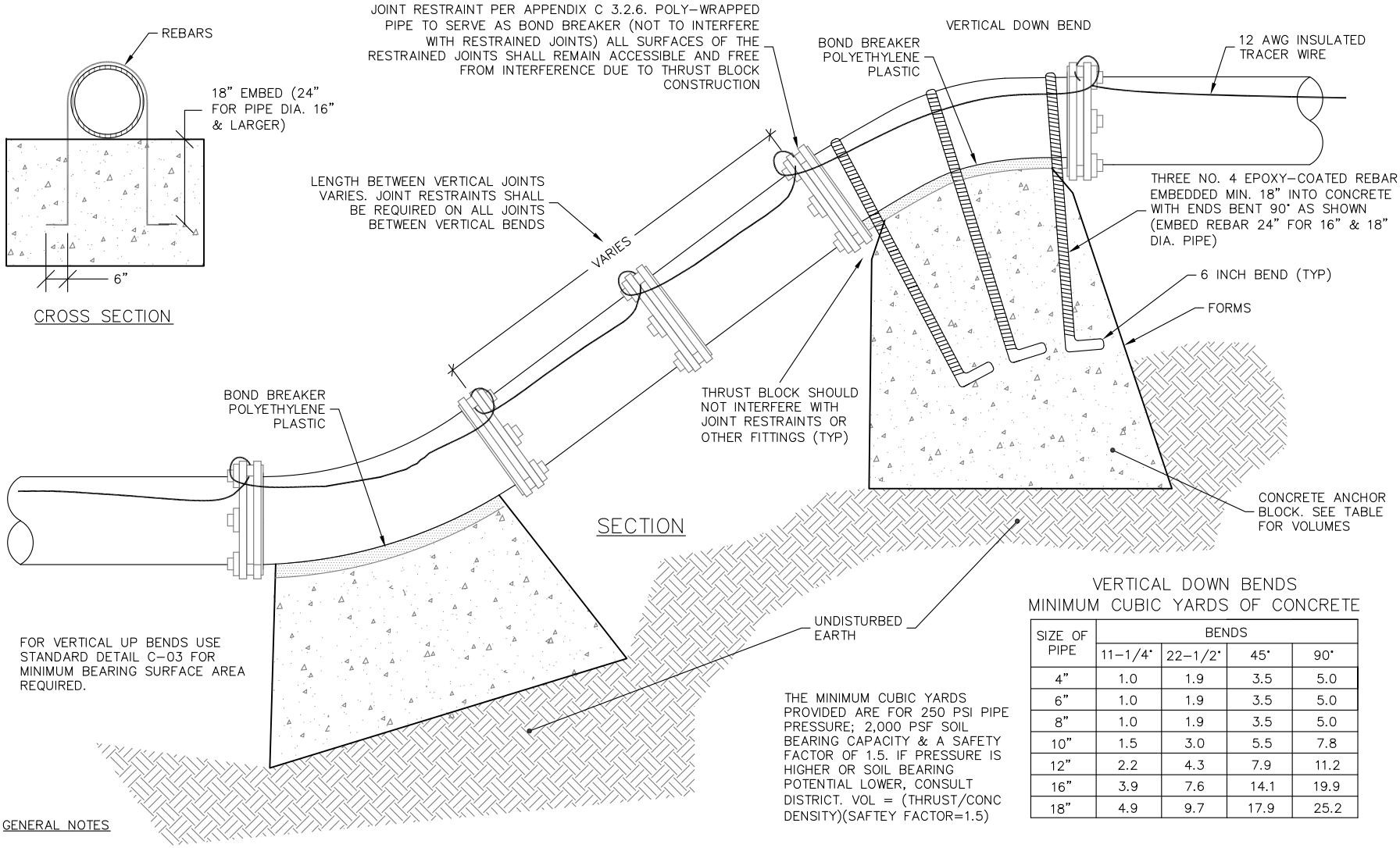

FOR VERTICAL UP BENDS USE STANDARD DETAIL C-03 FOR MINIMUM BEARING SURFACE AREA REQUIRED.

THE MINIMUM CUBIC YARDS PROVIDED ARE FOR 250 PSI PIPE PRESSURE; 2,000 PSF SOIL BEARING CAPACITY & A SAFETY FACTOR OF 1.5. IF PRESSURE IS HIGHER OR SOIL BEARING POTENTIAL LOWER, CONSULT DISTRICT. VOL = (THRUST/CONC DENSITY)(SAFTEY FACTOR=1.5)

VERTICAL DOWN BENDS
MINIMUM CUBIC YARDS OF CONCRETE

SIZE OF PIPE	BENDS			
	11-1/4°	22-1/2°	45°	90°
4"	1.0	1.9	3.5	5.0
6"	1.0	1.9	3.5	5.0
8"	1.0	1.9	3.5	5.0
10"	1.5	3.0	5.5	7.8
12"	2.2	4.3	7.9	11.2
16"	3.9	7.6	14.1	19.9
18"	4.9	9.7	17.9	25.2

GENERAL NOTES

1. JOINT RESTRAINTS (PER 3.2.5) SHALL BE USED IN CONJUNCTION WITH THRUST BLOCKS.
2. REFER TO DISTRICT STANDARDS IN APPENDIX C SECTION 3.6 FOR THRUST BLOCK REQUIREMENTS.
3. THRUST BLOCKS SHALL BE INSTALLED SO THAT ALL JOINTS ARE ACCESSIBLE. POLYWRAP FITTINGS PRIOR TO POURING THRUST BLOCK, EXTEND WRAP TO ENCLOSE ALL FITTINGS AND BOLTS.
4. THRUST BLOCKS SHALL BE FORMED AGAINST UNDISTURBED SOIL. FORMS PER 3.6.4.
5. BLOCK HEIGHT SHALL BE ESTABLISHED SUCH THAT THE CALCULATED BLOCK WIDTH IS BETWEEN ONE AND TWO TIMES THE HEIGHT.
6. THRUST BLOCK SHALL NOT INTERFERE WITH ACCESS TO FITTING AND JOINT RESTRAINT BOLTS.
7. POLYETHYLENE BOND BREAKER PER 3.2.9.

EAGLE RIVER WATER & SANITATION DISTRICT
846 FOREST ROAD
VAIL, CO 81657
(970) 476-7480
WWW.ERWSD.ORG

VERTICAL THRUST BLOCK

DRAWN BY:	JEC	DATE:	03/01/2017
SCALE:	NONE	REV:	1/21/2020

C-05

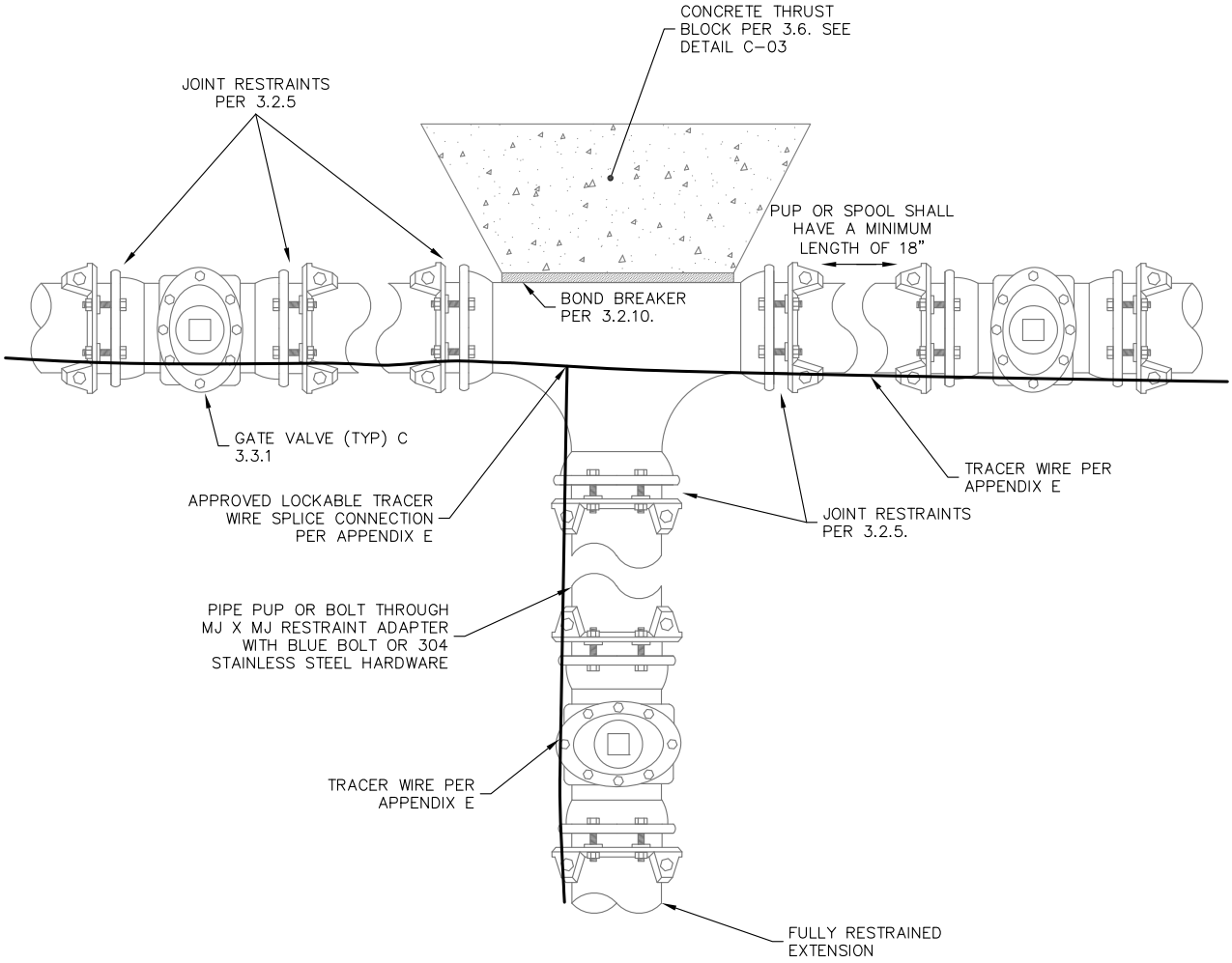

TOP VIEW

GENERAL NOTES

1. TEES SHALL BE CONSIDERED ON AN INDIVIDUAL BASIS. ALL USES OF THIS APPLICATION SHALL REQUIRE PRIOR DISTRICT APPROVAL.
2. JOINT RESTRAINT DEVICES SHALL BE REQUIRED ON ALL TEE APPLICATIONS.
3. THRUST BLOCKS ALONE WILL NOT BE ACCEPTED AS A RESTRAINT.

EAGLE RIVER WATER & SANITATION DISTRICT
846 FOREST ROAD
VAIL, CO 81657
(970) 476-7480
WWW.ERWSD.ORG

TEE DETAIL

DRAWN BY:	JEC	DATE:	03/01/2017
SCALE:	NONE	REV:	1/21/2020

C-06

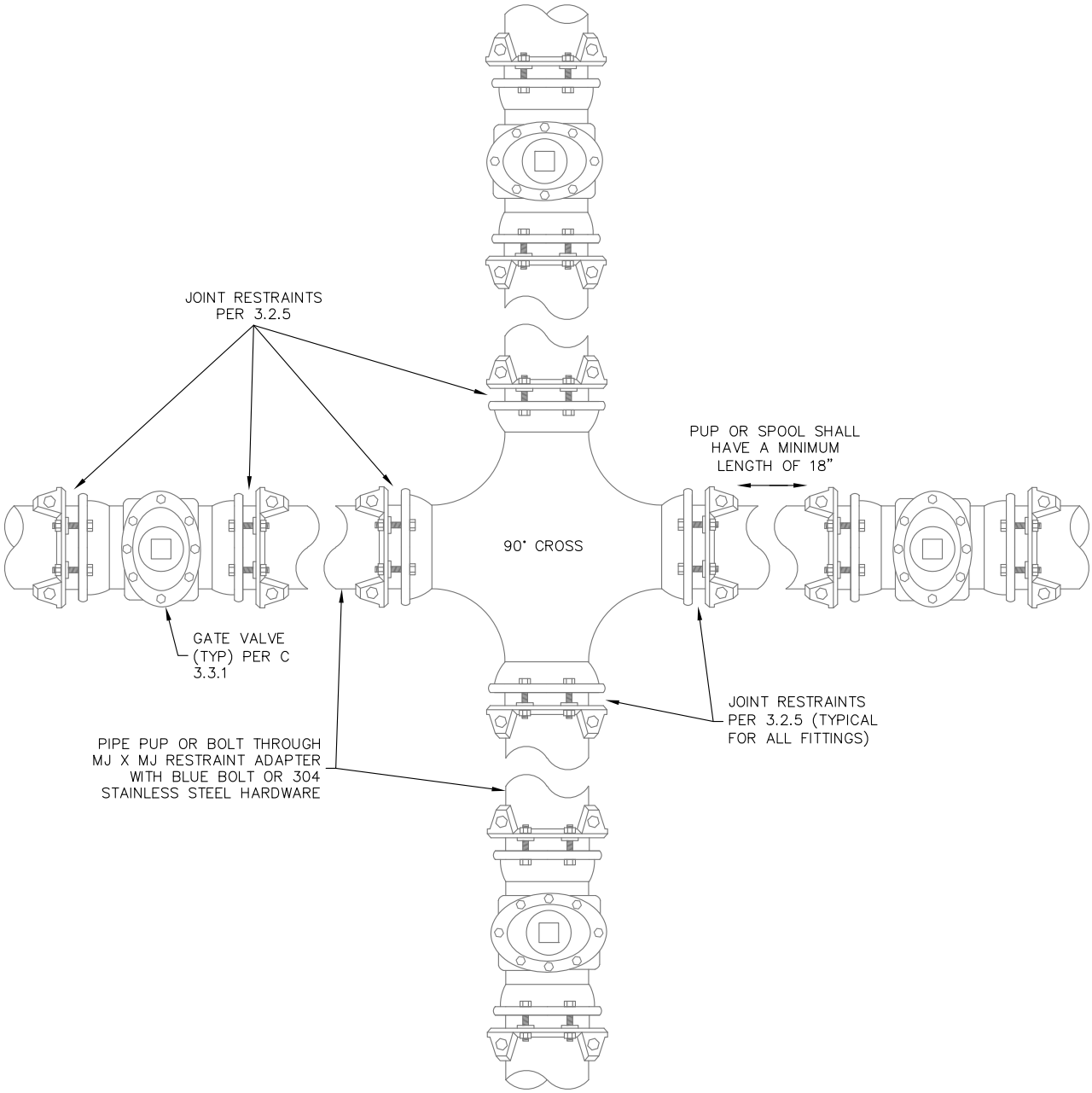

TOP VIEW

GENERAL NOTES

1. CROSSES SHALL BE CONSIDERED ON AN INDIVIDUAL BASIS. ALL USES OF THIS APPLICATION SHALL REQUIRE PRIOR DISTRICT APPROVAL.
2. JOINT RESTRAINT DEVICES SHALL BE REQUIRED ON ALL CROSS APPLICATIONS AND RESTRAINED LENGTH CALCULATIONS SHALL BE PROVIDED BY ENGINEER.
3. TRACER WIRE NOT SHOWN FOR CLARITY. TRACER WIRE SHALL BE INSTALLED PER APPENDIX E AND CONNECTED WITH LOCKABLE SPLICE CONNECTIONS.

EAGLE RIVER WATER & SANITATION DISTRICT
846 FOREST ROAD
VAIL, CO 81657
(970) 476-7480
WWW.ERWSD.ORG

90° CROSS DETAIL

DRAWN BY:	JEC	DATE:	03/01/2017
SCALE:	NONE	REV:	1/20/2020

C-07

NOTE: VALVES SHALL NOT BE INSTALLED IN BAR DITCHES. PROPOSED LOCATIONS SHALL BE APPROVED BY THE DISTRICT PRIOR TO INSTALLATION.

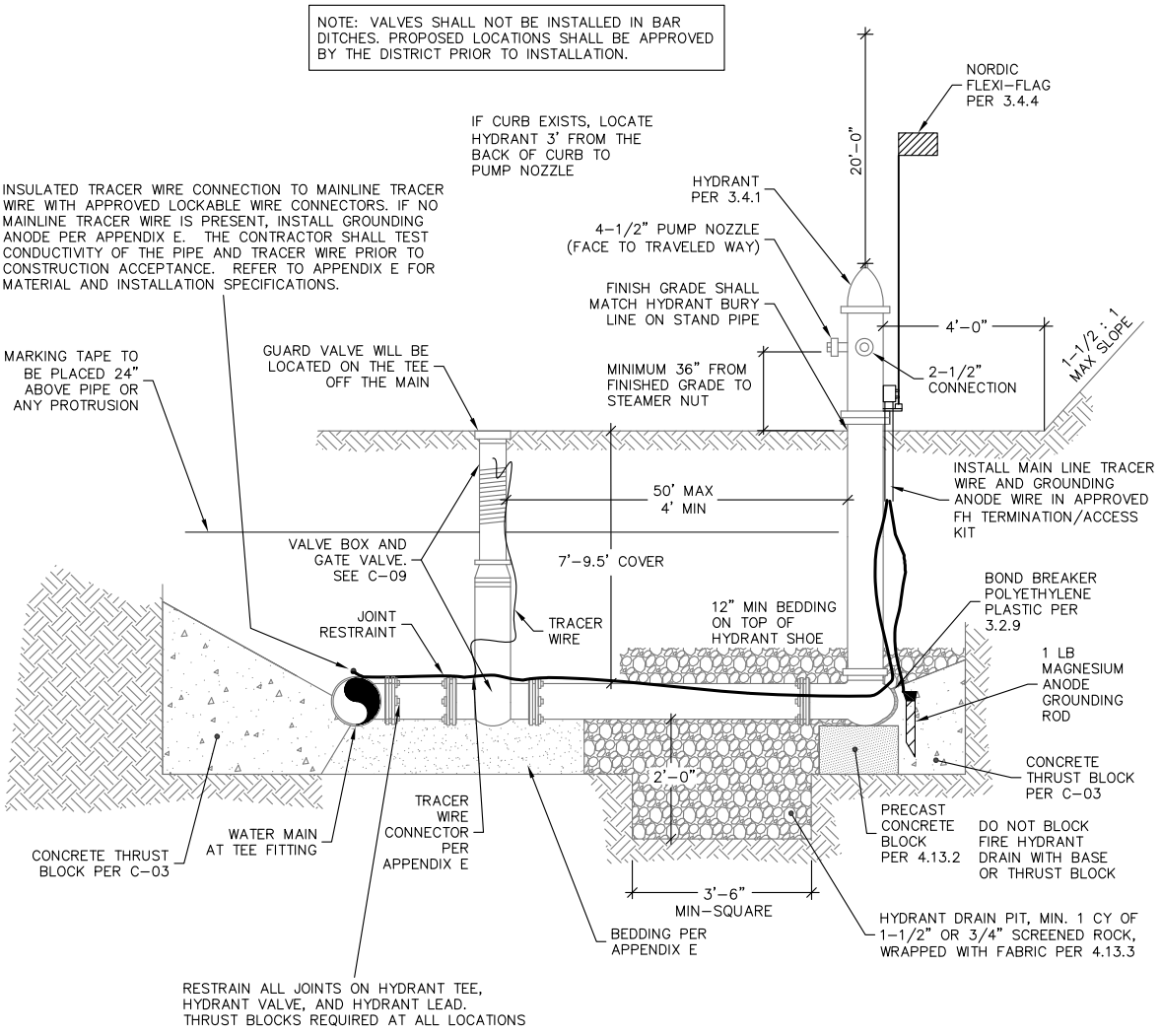

EAGLE RIVER WATER & SANITATION DISTRICT

846 FOREST ROAD
VAIL, CO 81657
(970) 476-7480

WWW.ERWSD.ORG

FIRE HYDRANT ASSEMBLY

DRAWN BY:	JEC	DATE:	03/01/2017
SCALE:	NONE	REV:	1/20/2020

C–08

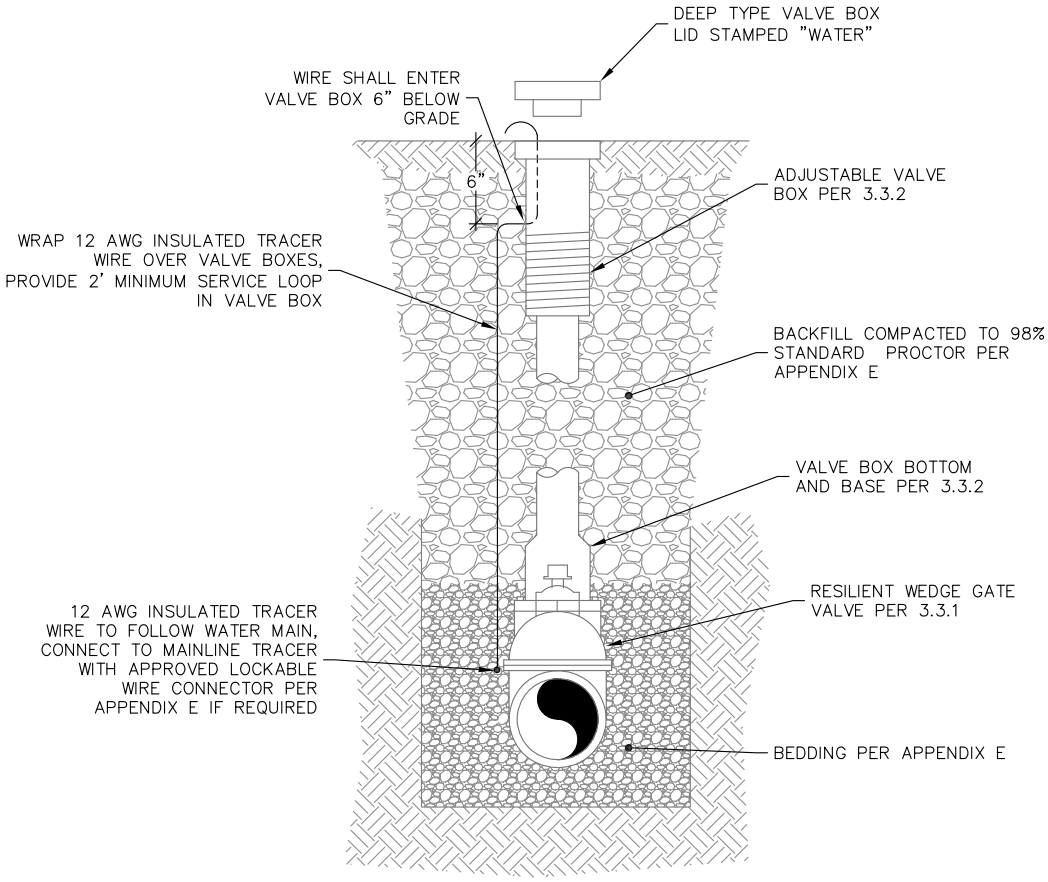

GENERAL NOTES

1. VALVE BOX IS TO BE INSTALLED PLUMB, LEVEL, AND CENTERED ON 2" NUT.
2. IF THE DISTANCE FROM THE TOP OF THE OPERATING NUT TO THE TOP OF THE VALVE COVER IS GREATER THAN 9', A CENTERING RING AND EXTENSION STEM IS REQUIRED. THE EXTENSION MUST BE SECURED TO THE VALVE OPERATING NUT.

EAGLE RIVER WATER & SANITATION DISTRICT
846 FOREST ROAD
VAIL, CO 81657
(970) 476-7480
WWW.ERWSD.ORG

GATE VALVE AND VALVE BOX ASSEMBLY

DRAWN BY:	JEC	DATE:	03/01/2017
SCALE:	NONE	REV:	1/21/2020

C-09

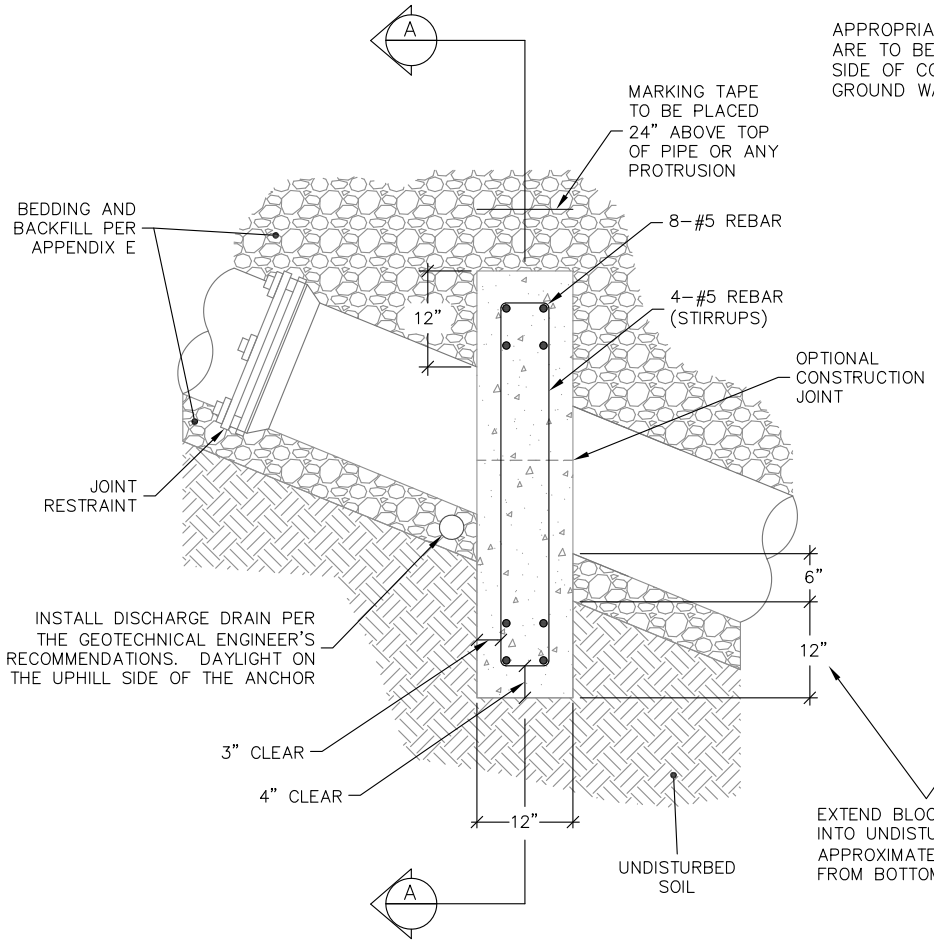

APPROPRIATE DRAINS TO DAYLIGHT ARE TO BE LOCATED ON THE UPHILL SIDE OF CONCRETE BLOCKS SEE GROUND WATER BARRIER DETAIL

EXTEND BLOCK 12" MIN INTO UNDISTURBED SOIL. APPROXIMATELY 18" FROM BOTTOM OF PIPE

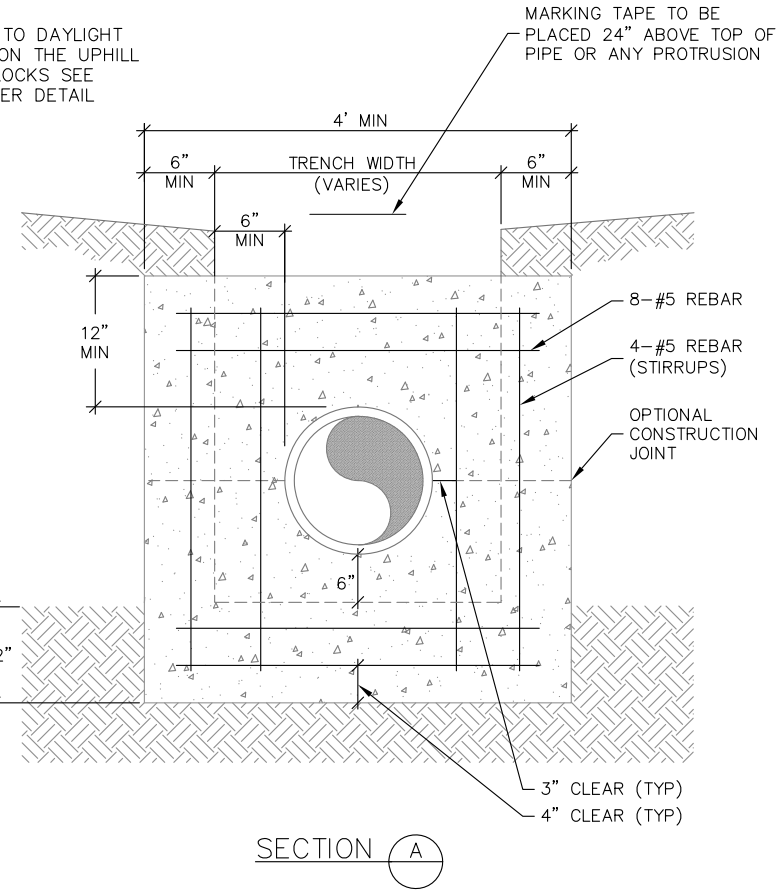

SECTION A

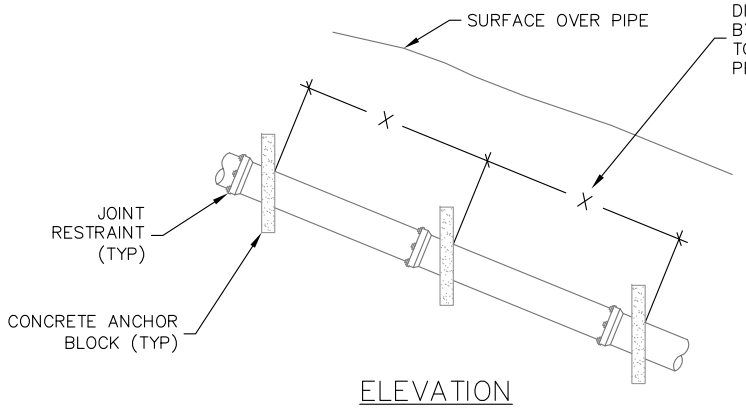

ELEVATION

SPACING GUIDELINES X=MAXIMUM SPACING	
X (FT) MAX.	GRADE (%)
36	20 – 35
24	35 – 50
16	50+

GENERAL NOTES

1. ANCHOR BLOCKS ARE REQUIRED FOR SLOPES GREATER THAN 20%.
2. CONCRETE SHALL BE 4,000 PSI MIN. SEE SECTION 3.6 FOR CONCRETE AND REBAR REQUIREMENTS.
3. PIPE SHALL BE POLY–WRAPPED PRIOR TO PLACING CONCRETE TO ENSURE CONCRETE DOES NOT CONTRACT PIPE AND FITTINGS.

EAGLE RIVER WATER & SANITATION DISTRICT
846 FOREST ROAD
VAIL, CO 81657
(970) 476-7480
WWW.ERWSD.ORG

ANCHOR BLOCK/ CUTOFF COLLAR

DRAWN BY: JEC	DATE: 03/01/2017
SCALE: NONE	REV: N/A

C–10

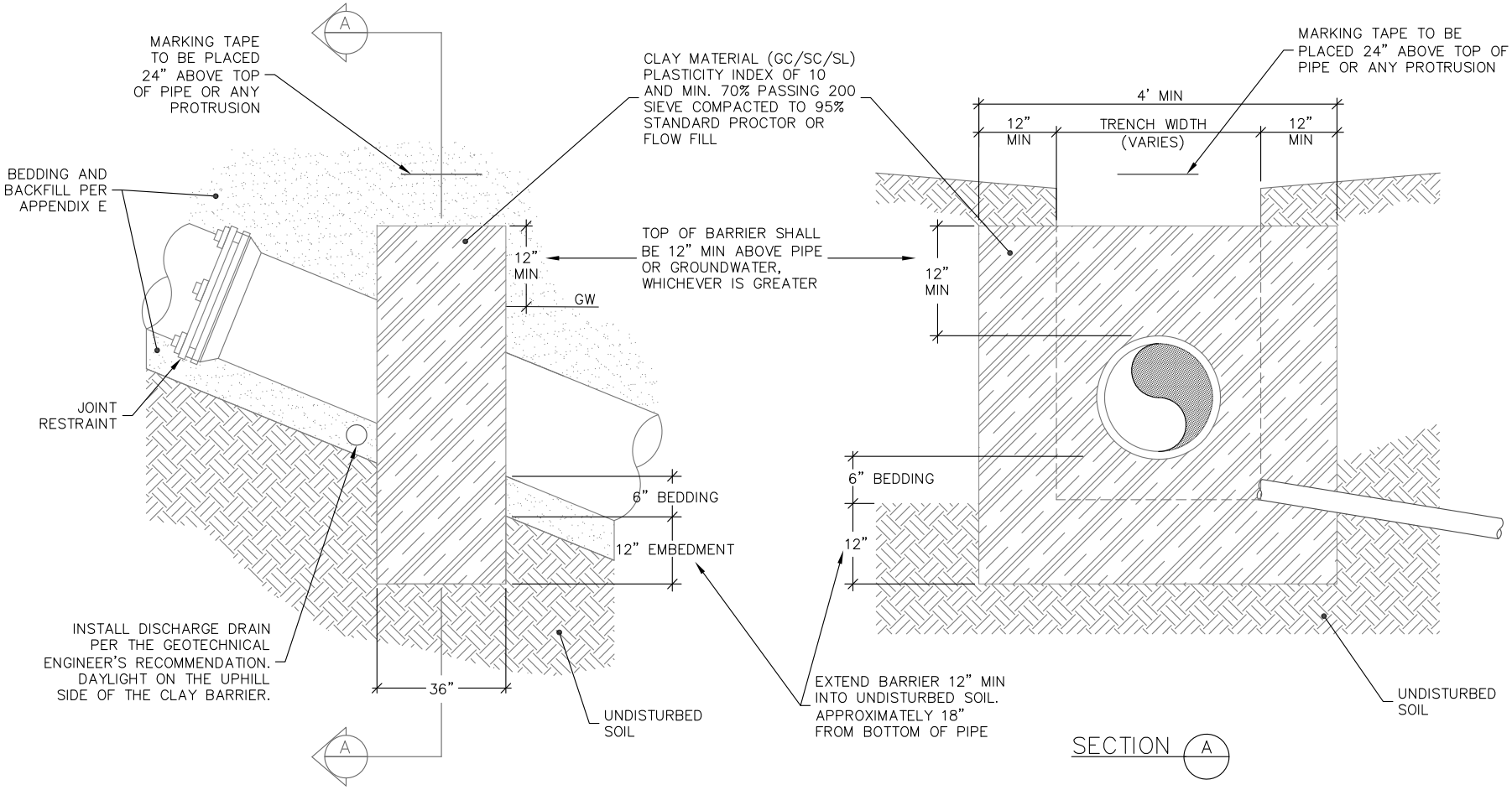

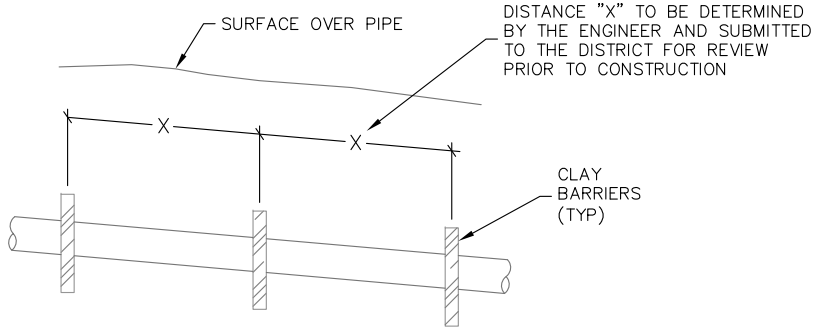

ELEVATION

EAGLE RIVER WATER & SANITATION DISTRICT	GROUNDWATER BARRIER		
	DRAWN BY: JEC	DATE: 03/01/2017	
846 FOREST ROAD VAIL, CO 81657 (970) 476-7480 WWW.ERWSD.ORG	SCALE: NONE	REV: N/A	
	C–11		

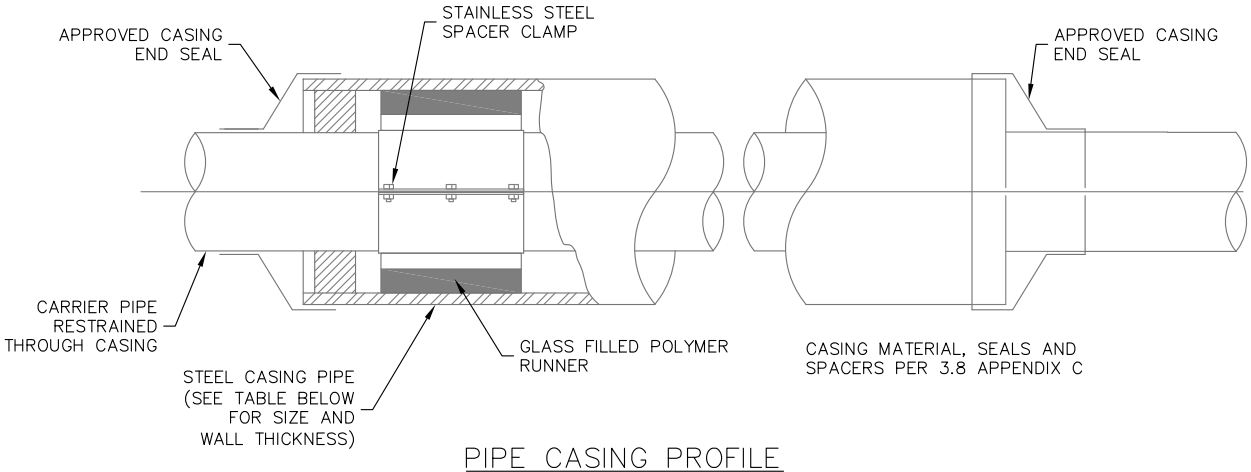

PIPE CASING PROFILE

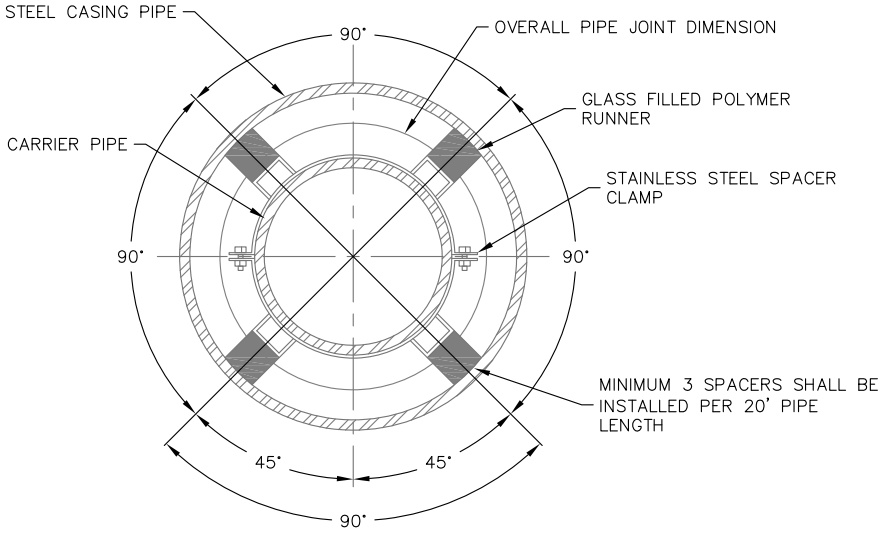

PIPE CASING CROSS SECTION

GENERAL NOTES

1. FOLLOW MANUFACTURER'S RECOMMENDATION, IF IN CONFLICT WITH ERWSD STANDARDS, USE MORE RESTRICTIVE SPECIFICATION.
2. CARRIER PIPE SHALL BE CENTERED AND ALL JOINTS RESTRAINED IN & THROUGH THE CASING PIPE.
3. WATER MAINS SHALL BE ENCASED SEPARATELY FROM OTHER UTILITIES.
4. ALL FASTENERS SHALL BE T-304 STAINLESS STEEL.
5. ALL CAD WELDS SHALL BE CONNECTED TO PIPE.
6. MAXIMUM DISTANCE BETWEEN SPACERS SHALL BE 6 FEET ON CENTER.

CARRIER PIPE NOMINAL ø	CASING PIPE	
	MIN OD	MIN WALL THICKNESS
4"	12"	0.25"
6"	16"	0.3125"
8"	18"	0.3125"
12"	22"	0.375"
16"	28"	0.500"
20"	32"	0.500"

EAGLE RIVER WATER & SANITATION DISTRICT
846 FOREST ROAD
VAIL, CO 81657
(970) 476-7480
WWW.ERWSD.ORG

WATERLINE CASING DETAIL

DRAWN BY:	JEC	DATE:	03/01/2017
SCALE:	NONE	REV:	N/A

C-12

USE OF POLYETHYLENE WRAP FOR CORROSIVE SOILS

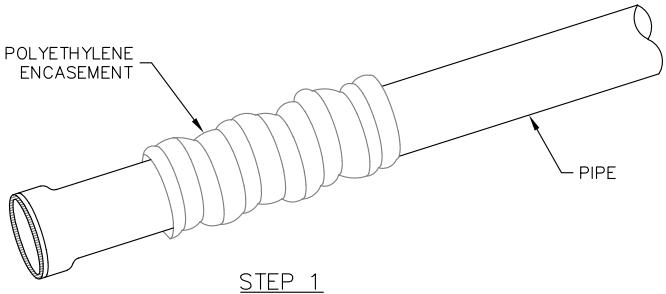

STEP 1

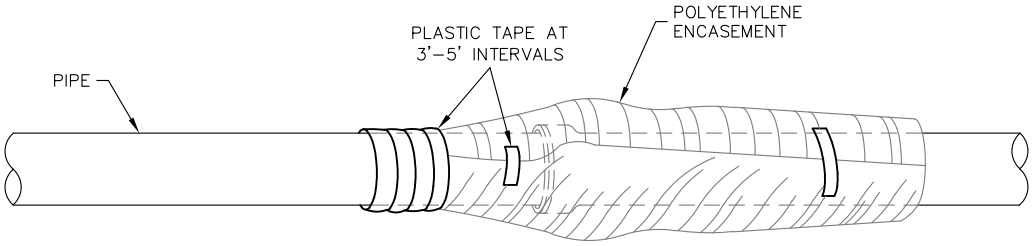

STEP 2

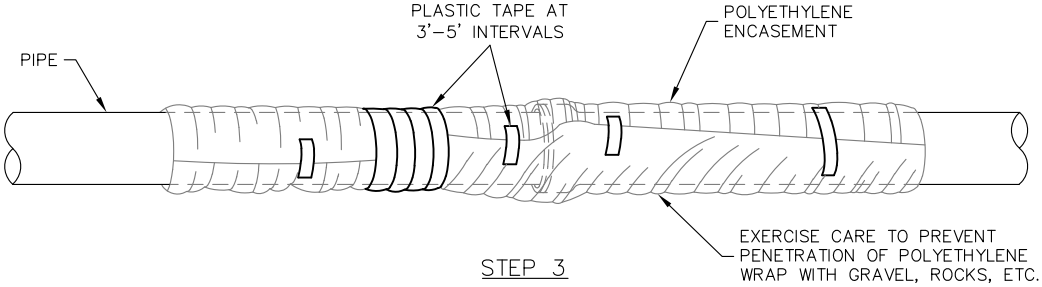

STEP 3

FIELD INSTALLATION – POLYETHYLENE WRAP

STEP 1 – PLACE POLYETHYLENE MATERIAL ON PIPE PRIOR TO LOWERING IT INTO PLACE.

STEP 2 – PULL THE TUBE OVER THE LENGTH OF THE PIPE. TAPE TUBE TO PIPE AT JOINT. FOLD MATERIAL AROUND THE ADJACENT SPIGOT END AND WRAP WITH TAPE TO HOLD THE POLYETHYLENE ENCASEMENT IN PLACE.

STEP 3 – OVERLAP FIRST TUBE WITH ADJACENT TUBE AND SECURE WITH PLASTIC ADHESIVE TAPE. THE POLYETHYLENE TUBE MATERIAL COVERING THE PIPE SHALL BE LOOSE. EXCESS MATERIAL SHALL BE NEATLY DRAWN UP AROUND THE PIPE BARREL, FOLDED ON TOP OF PIPE AND TAPED IN PLACE.

GENERAL NOTES:

1. ALL DUCTILE IRON PIPE REQUIRES THE USE OF POLYETHYLENE WRAP UNLESS APPLICANT SUBMITS A SOILS TEST INDICATING THAT NO CORROSIVE SOILS ARE PRESENT.
2. POLYETHYLENE ENCASEMENT PER APPENDIX C 3.2.10.

EAGLE RIVER WATER & SANITATION DISTRICT
846 FOREST ROAD
VAIL, CO 81657
(970) 476-7480
WWW.ERWSD.ORG

POLYETHYLENE WRAP

DRAWN BY:	JEC	DATE:	03/01/2017
SCALE:	NONE	REV:	N/A

C–13

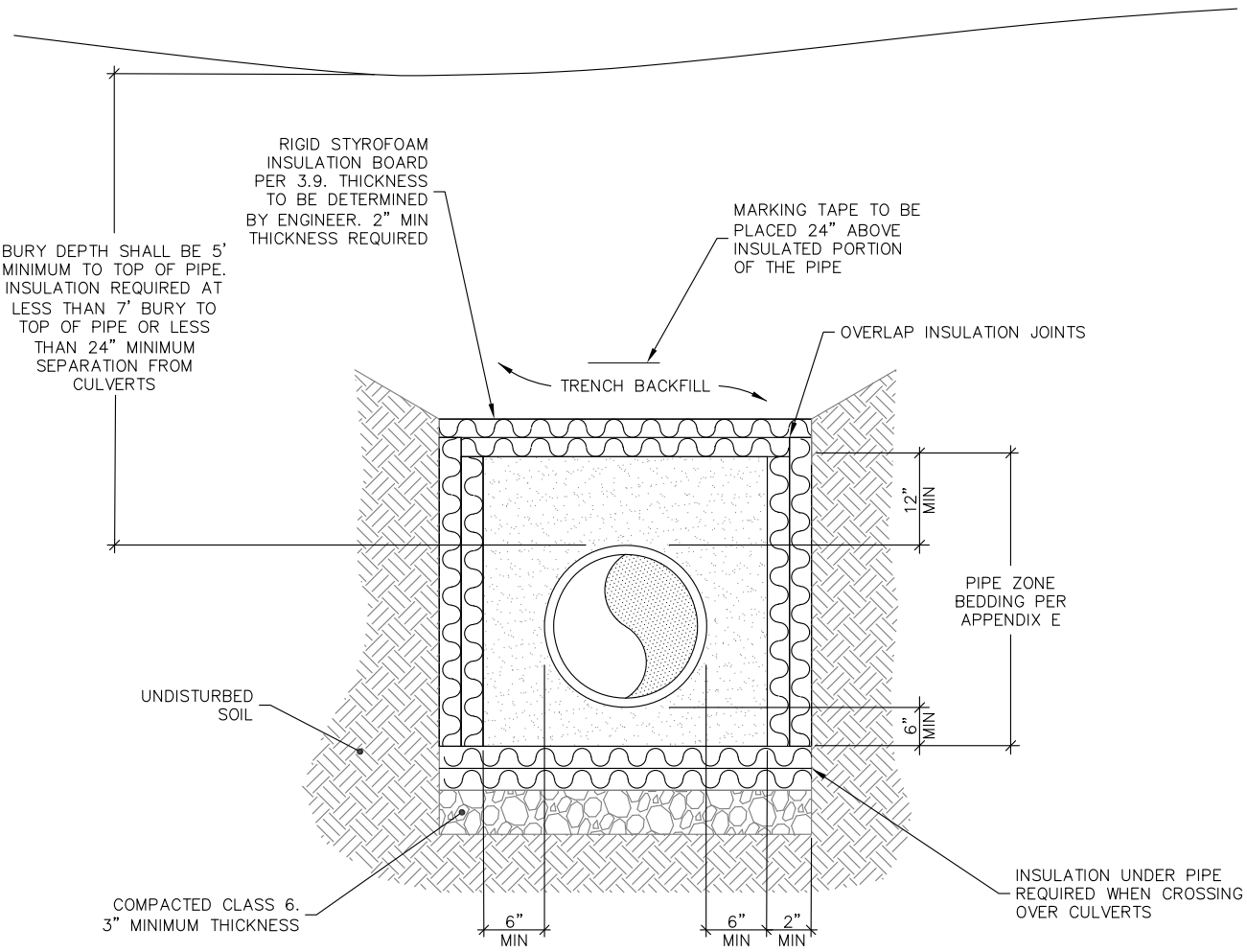

ELEVATION

GENERAL NOTES

1. CONDITION OF LESS THAN MINIMUM BURY DEPTH ALLOWED ONLY WITH WRITTEN APPROVAL FROM THE DISTRICT PRIOR TO CONSTRUCTION. INSULATION SHALL BE INSTALLED ON ALL PIPE THAT DOES NOT MEET MINIMUM BURY REQUIREMENTS.
2. SEE SEWER AND WATER PIPE BEDDING DETAIL AND APPENDIX E FOR BACKFILL MATERIAL AND COMPACTION SPECIFICATIONS.
3. INSULATION SHALL BE INSTALLED ON ALL PIPES THAT DO NOT HAVE A MINIMUM OF 7' OF EFFECTIVE COVER. EFFECTIVE COVER SHALL BE DEFINED AS SEPARATION FROM COLD AIR SOURCES, INCLUDING STORM SEWERS. 1" OF INSULATION BOARD MAY BE SUBSTITUTED FOR EACH 1' OF SOIL COVER (MIN. 2" INSULATION) REQUIRED TO MEET THE MINIMUM COVER REQUIREMENT.
4. INSULATION SPECIFICATIONS PER APPENDIX C 3.9.

EAGLE RIVER WATER & SANITATION DISTRICT
846 FOREST ROAD
VAIL, CO 81657
(970) 476-7480
WWW.ERWSD.ORG

MINIMUM COVER AND CULVERT CROSSING INSULATION DETAIL

DRAWN BY:	JEC	DATE:	03/01/2017
SCALE:	NONE	REV:	N/A

C-14

WATER MAIN COVER DEPTH	MINIMUM EASEMENT WIDTH REQUIRED
7'–0" TO 8'–6"	20'
8'–7" TO 9'–6"	25'

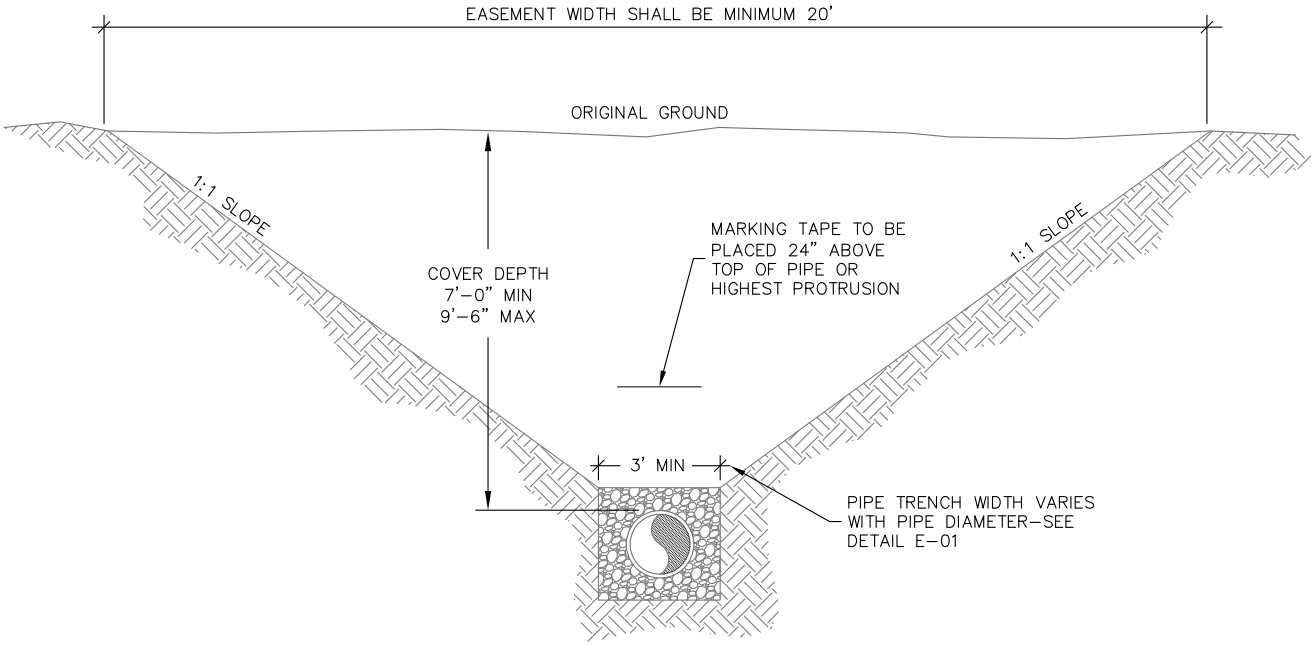

MINIMUM EASEMENT WIDTH

GENERAL NOTES

1. PIPE SHALL BE CENTERED IN EASEMENT.
2. CALCULATE EASEMENT WIDTH AS FOLLOWS:
   W = DEPTH TO TOP OF PIPE X 2 + 3 FEET
   (ROUND UP IN 5 FOOT INCREMENTS)

EXAMPLE:
9 FOOT DEEP PIPE = 9 X 2 + 3 = 21 FEET
W = 25 FOOT WIDE EASEMENT (ROUNDED UP)

EAGLE RIVER WATER & SANITATION DISTRICT
846 FOREST ROAD
VAIL, CO 81657
(970) 476-7480
WWW.ERWSD.ORG

EASEMENT WIDTH DETAIL

DRAWN BY:	JEC	DATE:	03/01/2017
SCALE:	NONE	REV:	N/A

C–15

HYDRANT CLEARANCE DIAGRAM

NO ABOVE GROUND OBSTRUCTIONS ALLOWED IN THESE AREAS

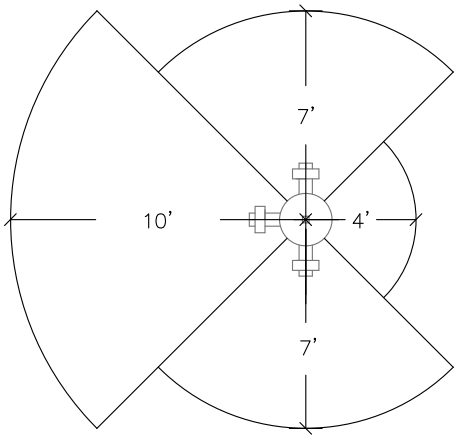

FRONT---10 FEET OF CLEARANCE

SIDES---7 FEET OF CLEARANCE

REAR---4 FEET OF CLEARANCE

ABOVE---20 FEET OF CLEARANCE

HYDRANT BOLLARD DIAGRAM

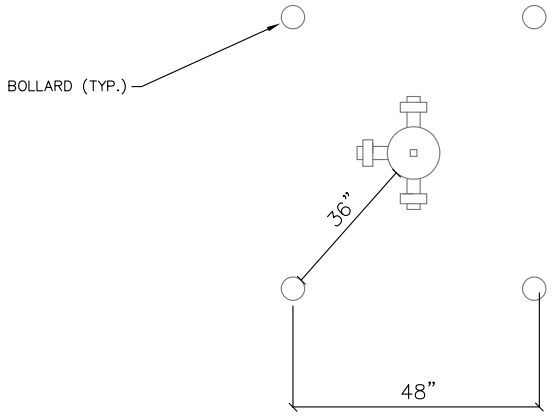

BOLLARDS REQUIRED WHEN LESS THAN 3' OF HORIZONTAL CLEARANCE EXISTS BETWEEN HYDRANT AND BACK OF CURB/EDGE OF ROAD

BOLLARD DETAIL

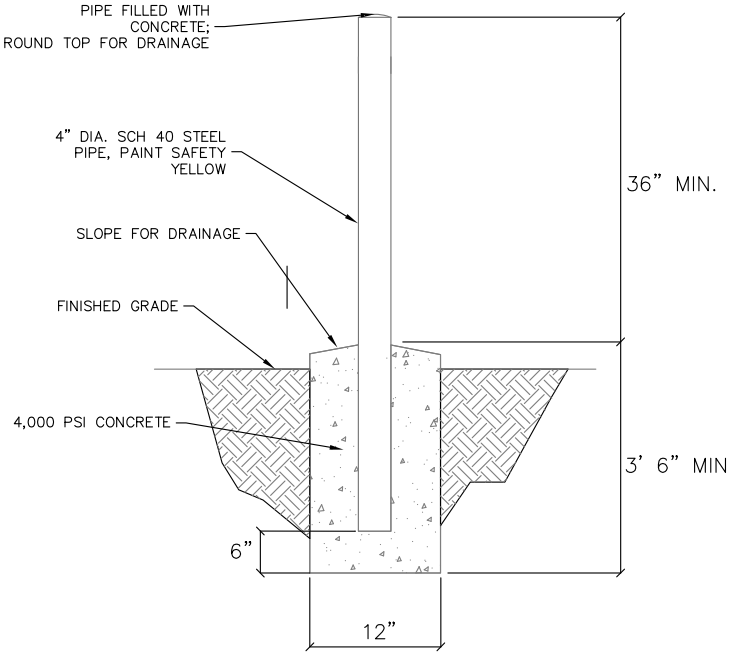

EAGLE RIVER WATER & SANITATION DISTRICT

846 FOREST ROAD
VAIL, CO 81657
(970) 476-7480

WWW.ERWSD.ORG

FIRE HYDRANT CLEARANCES AND BOLLARDS

DRAWN BY:	JRS	DATE:	1/20/2020
SCALE:	NONE	REV:	N/A

C-16

SECTION VI – STANDARD FORMS AND DETAILS

Form C1: Pre-Construction Checklist for Water Mainline Installations

Form C2: Water System Acceptance Procedure

Form C3: Bill of Sale TRMD – Water Main

Form C4: Water Easement – Two Rivers Metro District

Form C5: Lender's Consent

C-01: Combination Air Valve/Vacuum Valve + Manhole

C-02: Combination Air Valve/Vacuum Valve + Manhole (High Groundwater)

C-03: Concrete Thrust Blocks

C-04: Parallel Bends

C-05: Vertical Thrust Block

C-06: Tee Detail

C-07: 90° Cross Detail

C-08: Fire Hydrant Assembly

C-09: Gate Valve and Box Assembly

C-10 Anchor Block Cutoff Collar

C-11: Groundwater Barrier

C-12: Waterline Casing Detail

C-13: Polyethylene Wrap

C-14: Minimum Cover and Culvert Crossing Insulation Detail

C-15: Easement Width Detail

C- 6: Fire Hydrant Clearances and Bollards

Form C1: **Pre-Construction Meeting Checklist for Water Main Installation**

Project: _____Location:_____

Date:_____Attendees:_____

☐ **1. Customer Notification**

☐ **2. All licenses and permits are secured for work.**

☐ **3. A bill of materials has been provided and reviewed.**

☐ **4. Site Safety**

- ✓ OSHA safety standards and practices apply.

☐ **5. Survey**

- ✓ Survey layout is complete and surveyor retained for as-built locations.

☐ **6. Minimum Depth of Bury and Bedding**

- ✓ Seven to nine foot six inches (7'-9.5')
- ✓ In cases where minimum bury depth cannot be achieved, one inch (1") of approved insulation will be required per foot of missing cover, minimum 2 inches.
- ✓ Six inches (6") of approved bedding material under the pipe and twelve inches (12") over the top of pipe.

☐ **7. Cutting of Pipe**

- ✓ All cuts will be straight, true and **beveled**. All burrs will be removed from the ends of cut pipe and the ends lightly rasped or filed.

☐ **8. Tracer Wire and Joint Bonding**

- ✓ Tracer wire *#12 AWG 0.1019" diameter copper conductor or copper clad steel insulated with a 30 mil, high-density, high molecular weight polyethylene (HDPE) insulation, blue in color, and rated for direct burial use at 30 volts. Tracer wire will be installed on all water mains and service lines.
- ✓ The Applicant shall submit plans for a complete tracer wire system.
- ✓ All new mainline trace wire installations shall be located by the applicant using typical low frequency (512Hz) line tracing equipment, witnessed by the inspector, contractor, engineer and facility owner as applicable, prior to acceptance of ownership.

- ✓ Tracer wire grounding anode at all dead ends
- ✓ Tracer wire splicing/connections shall include two and 3 way lockable connectors or a three way lug connector specifically manufactured for use in underground trace wire installation
- ✓ A No. 4 conductor and cad-welds or continuity straps will be used to bond each joint and fitting.

☐ 9. Marking Tape and Locating Disk

- ✓ Marking tape will be placed twenty-four inches (24") above the pipe for all main and service lines. Marking tape shall be solid blue color with black lettering six inches (6") wide and of five (5)-mil thick PVC material.
- ✓ A 3M disk marker will be placed at all service curb stops with a maximum four foot (4') bury from finish grade

☐ 10. Thrust Blocks and Anchors

- ✓ Concrete thrust blocks and anchors will be used in conjunction with mechanical joint restraints. All mechanical joints require megalugs. Thrust blocks will be poured and formed per District specifications and inspected by the District inspector prior to backfill.

☐ 11. Fire Hydrants

- ✓ Fire hydrants will be Mueller Centurion Mountain or Kennedy Guardian K81 hydrants with a fire hydrant marker flag installed. Fire hydrants will be installed to the bury line on the fire hydrant stand pipe and a maximum of six inches (6") below the flange. Fire hydrant extensions are not allowed on new construction.

☐ 12. Testing

- ✓ Allow a minimum of five (5) days for testing for each test segment; 24 hours for high and low chlorine tests, two consecutive sets of bacteriological tests taken 24 hours apart and hydrostatic pressure testing of mains and required assets. Main lines will be disinfected and bacteriological samples approved prior to hydrostatic pressure tests. Disinfection must be per ANSI/AWWA C651 using calcium hypochlorite granules, not tablets. The contractor is responsible for disposal of chlorinated water used for disinfection. No main, which has been disinfected and flushed, shall stand stagnant for more than 15 days without being re-flushed and a new disinfecting test performed, passed, and approved by the District.

☐ 13. Tapping and Service Lines

- ✓ Service lines will not be tapped until the main has passed all testing procedures.
- ✓ Service lines will be tapped above the spring line of the pipe (10 or 2 o'clock position)

☐ 14. Valve and Curb Stop Boxes

- ✓ All curb stop boxes will require extension rods.
- ✓ The top of the shaft will be between 18 and 24 inches below final grade.
- ✓ All valve boxes are to be centered and plumb over the operating nut.

☐ 15. Stub Outs

- ✓ Stub outs will be only allowed to the edge of easement or the property line.

☐ 16. Design Changes

- ✓ Engineer must submit any design changes to Construction Review prior to implementation. Minor field changes may be approved by the District inspector and must be reflected on as-built documentation.

☐ 17. Water Service Connection

- ✓ Any type of rebuild or remodel may require the payment of additional tap fees.
- ✓ No service connections will be made until Construction Acceptance is granted.
- ✓ No service line will be extended into the property until Customer Service has been provided the required documents and the account number has been assigned.
- ✓ Service line inspections will only occur after authorization has been granted by the Customer Service Department.
- ✓ Connection prior to the payment of the entire assessed tap fee will result in an "unauthorized connection" assessment.

☐ 18. Construction acceptance includes the following:

- ✓ Rough grade inspection.
- ✓ All chlorine, bacteriological, and pressure tests approved.
- ✓ All valve boxes, fire hydrants and Air Vac/PRV vaults to grade and operated.
- ✓ Drawings of record submitted and approved.
- ✓ Easement documentation.
- ✓ Project costs.
- ✓ Bill of sale.

☐ 19. Warranty Period-

- ✓ Will not start until Drawings of Record, Recorded Easement Documents, Project Costs Documents and Bill of Sale are received and approved by the District

Reference: Two Rivers Metropolitan District Rules and Regulations Appendix C – Standard Specifications for Water Mains

Contractor:_____**Engineer:**_____

Owner:_____**Inspector:**_____

FORM C2: WATER SYSTEM ACCEPTANCE PROCEDURE

Location: _____

Project: _____ **Phase:** __

Engineer: _____ **Applicant:** ___

Contractor: _____ **Excavator:** ___

CONSTRUCTION REVIEW TEAM (CRT)

	Date	Approved By
Plans Approved for Construction:		

FIELD OPERATIONS INSPECTOR

Inspection/Test Type		Date	Values	Sign Off
1) Water Assets Inspections	__			
2) Tracer Wire Testing	__			
3) High Chlorine:	__			
4) Low Chlorine:	__			
5) Passed Bac-T #1	__			
6) Passed Bac-T #2	__			
7) Hydrostatic PSI Test	__			
8) Rough Grade and Paving	__			
9) As-Built / GIS Review:	__			
10) Final Grade and Paving	__			

DEVELOPMENT REVIEW COORDINATOR

	Date	Sign Off
11) **Construction Acceptance**		

FIELD OPERATIONS INSPECTOR

	Date	Sign Off
12) 2-Year Warranty WO Created		
13) 2-Year Warranty Inspection		

DEVELOPMENT REVIEW COORDINATOR

14) **Final Acceptance**		

BILL OF SALE DISTRICT – WATER MAIN

KNOW ALL MEN BY THESE PRESENTS, that _____ _____, ("Seller"), for and in consideration of the mutual promises and assurances made herein, the sufficiency of which is hereby acknowledged, and other valuable consideration to be paid by the **Two Rivers Metro District** ("District"), a quasi-municipal corporation of the State of Colorado, has bargained and sold, and by these presents does grant and convey unto the District, its successors and assigns, the following property:

> The water system, equipment, and related appurtenances and facilities, including all related personal property (the "Improvements"), which are constructed or otherwise acquired by Seller within the property generally known as _____ _____ _____, and described on Exhibit A, attached hereto and incorporated herein by reference.

To have and to hold the same, unto the District, its successors and assigns forever, and Seller, for itself, its successors and assigns, covenants and agrees to and with the District, its successors and assigns, to warrant and defend the sale of said Improvements, hereby made unto the District, its successors and assigns, against all and every person or persons whomsoever, and warrants that the conveyance of the Improvements to the District, its successors and assigns, is made free from any claim or demand whatsoever.

The Seller further agrees and assures:

1. That all of the Improvements described herein were installed in substantial compliance with the District's Rules and Regulations and applicable construction standards, and that said Improvements are in first-class working order, free from any defect whatever.

2. That no charges for materials or labor are due and payable on any of the Improvements described herein, and that Seller shall indemnify, defend, and hold the District and its agents, employees, engineers, and attorneys, harmless from and against all claims, damages, judgments, losses, and expenses of every nature, including reasonable attorney's fees, arising at any time out of any act or omission of Seller and its employees, subcontractors and their employees, and all other persons directly or indirectly involved or performing work for Seller on the Improvements described herein.

3. If within **TWO (2) YEARS** after the date of **Construction Acceptance** of the Improvements by the District, any Work is found to be defective, Seller shall promptly, without cost to the District and in accordance with the District's written instructions, within seven (7) days after the District's issuance of written instructions correct the defective Work at Seller's cost. If Seller does not promptly comply with the terms of such instructions or in an emergency where delay would cause serious risk of loss or damage, the District may have the defective Work corrected or removed and replaced, and all

direct and indirect costs of such removal and replacement, including compensation for additional professional services, shall be paid by Seller. Seller shall also pay for any damage done to other work, other property or persons which occurred as a result of the defective Work within the two-year warranty period.

4. Except for any notice required by law to be given in another manner, (a) any notice to Seller provided for in this Bill of Sale shall be in writing and shall be given and be effective upon (1) delivery to Seller or (2) mailing such notice by first class U.S. mail, addressed to Seller to Seller's address stated herein or at such other address as Seller may designate by notice to the District and (b) any notice to the District shall be in writing and shall be given and be effective upon (1) delivery to the District or (2) mailing such notice by first class U.S. mail, to the District's address stated herein or to such other address as the District may designate by notice.

IN WITNESS WHEREOF, the Seller has caused its name to be hereunto subscribed this _____ day of_____, 20 .

SELLER:
By: _____

_____
(Title)

_____
_____
Mailing Address

STATE OF COLORADO)
) ss.
COUNTY OF EAGLE)

The foregoing instrument was acknowledged before me this day of_____, 20 , by _____
as_____of_____.

WITNESS my hand and official seal.

(S E A L)

_____
Notary Public

My commission expires:

_____

WATER EASEMENT- TWO RIVERS METRO DISTRICT

THIS EASEMENT is made this_____day of_____, 20__, by and between_____(hereinafter referred to as "Grantor"), and it's successors and assigns, and the **TWO RIVERS METRO DISTRICT**, a quasi-municipal corporation of the State of Colorado within the County of Eagle, (hereinafter referred to as "District").

WITNESSETH, that for and in consideration of the sum of One Dollar ($1.00) and other good and valuable consideration paid by the District to Grantor, the receipt of which is hereby acknowledged, the Grantor does hereby grant, convey and transfer unto the District, its successors and assigns, a perpetual easement and right to construct, install, remove, replace, add to, maintain, repair, operate, change or alter underground water lines and all underground and surface appurtenances related thereto such as valve boxes, meter vaults and manholes (hereinafter "water lines"), together with any and all water lines situate therein, all necessary rights-of-way for convenient ingress and egress thereto and therefrom, and the right to occupy and use, from time to time, as much of the adjoining land of the Grantor as may be reasonably necessary for any of the aforesaid purposes, over, under and across the following described premises, situate in the County of Eagle, State of Colorado, to-wit:

See EXHIBIT A attached hereto and incorporated herein by reference.

Grantor warrants that the Grantor has the lawful right to grant and convey such easement, rights-of-way, and water lines. Further, Grantor warrants that the water lines are free and clear of all liens and encumbrances.

Grantor will at no time permit, place or construct any structure, building or improvement of any kind, temporary or permanent, on any part of the above-described premises. Any structure, building or improvement located on the above-described premises as of the date of this Easement, may be removed by the District without liability for damages arising therefrom.

Following the completion of the purpose of any entry by the District upon such easement for any of the aforesaid objects, the District shall restore the premises to substantially the same condition existing at the time of the entry thereon, except for shrubs, plants, sidewalks, driveways or parking areas thereon located or damaged thereby.

All provisions of the Easement, including all benefits and burdens, shall run with the land and shall be binding upon and inure to the benefit of the successors and assigns of the parties hereto, subject to the provisions hereof.

IN WITNESS WHEREOF, the parties hereto have set their hands and seal the day and year first above written.

GRANTOR:

_____
(Name of Grantor)

STATE OF COLORADO)
) ss.
COUNTY OF_____)

The foregoing Easement was subscribed and sworn to before me this _____ day of_____, 20__, by _____ _____.

WITNESS my hand and official seal.

(S E A L)

_____
Notary Public

My commission expires:

_____

ACCEPTED by the District this_____day of_____,20 .

By: General Manager

LENDER'S CONSENT

_____ Consents to the foregoing Easement and binds itself, its successors and assigns, the same as though its Deed of Trust, recorded on _____ _____, 20__, at Reception Number_____of the records of the Clerk and Recorder of_____County, Colorado, was made specifically subject to said Easement.

By:_____
Title:_____

STATE OF COLORADO)
) ss.
COUNTY OF_____)

The foregoing Easement was subscribed and sworn to before me this _____ day of_____, 20__, by _____ _____.

WITNESS my hand and official seal.

(S E A L)

Notary Public

My commission expires:

_____

RULES AND REGULATIONS
FOR
WATER AND WASTEWATER SERVICE

TWO RIVERS METROPOLITAN DISTRICT

APPENDIX D

STANDARD SPECIFICATIONS FOR SEWER MAINS

TABLE OF CONTENTS

SECTION I – GENERAL REQUIREMENTS 5

1.1 Authority 5
1.2 Effective Date of Specifications 5
1.3 Revisions, Amendments, or Additions 5
1.4 Definitions 5
1.5 Development Approval and Infrastructure Acceptance 5
1.6 Variance 5

SECTION II – COLLECTION SYSTEM DESIGN AND LAYOUT 6

2.1 General Requirements 6
2.2 Corrosion 6
2.2.1 Dissimilar Materials 6
2.2.2 Insulating Joints 6
2.3 Sizing Collection Mains 6
2.4 Layout of the Collection System 7
2.4.1 Easement Width Requirements for Main Installations 7
2.4.2 Minimum Size 7
2.4.3 Depth of Bury 7
2.4.4 Main Insulation Requirements 8
2.4.5 Minimum Distance from Structures 8
2.4.6 Installations in High Groundwater 8
2.5 Slope of Sewer Mains 8
2.5.1 Minimum Slopes 8
2.5.2 Maximum Slopes 9
2.5.3 Slope between Manholes 9
2.5.4 Steep Slope Applications 9
2.5.5 Slope across Manholes 10
2.5.6 Main Line Horizontal Alignment 10
2.5.7 Length of Mains and Slope Measurement 10
2.5.8 Manholes 10
2.5.9 Manhole Clearances 11
2.5.10 Manhole Connections 11
2.5.11 Location/Marking Tape 11
2.5.12 Pipe Material 11
2.5.13 Lift Stations 12
2.5.14 Maintenance Access 12
2.6 Protection of Potable Water Supplies 12
2.6.1 Cross Connections Prohibited 12
2.6.2 Relation to Water Works Structures 12
2.6.3 Horizontal and Vertical Separation from Potable Water Mains 12

SECTION III – MATERIAL SPECIFICATIONS 14

3.1 General Requirements 14
3.2 Pipe and Fittings 14
3.2.1 Polyvinyl Chloride (PVC) gravity pipe 14
3.2.2 Polyvinyl Chloride (PVC) pressure pipe 14
3.2.3 Ductile Iron Pipe (DIP) 15
3.2.4 Service Line Taps 15

3.2.5 Transition Adapter 15
3.3 Manholes 16
3.3.1 Manhole 16
3.3.2 Water Tightness 16
3.3.3 Rings and Covers 16
3.3.4 Grade Rings 16
3.3.5 Manhole steps 16
3.3.6 Joint Sealant 17
3.3.7 Pipe to Manhole Seal 17
3.3.8 Flow Channel 17
3.3.9 Bench 17
3.3.10 Manhole Base 18
3.3.11 Interior Coatings 18
3.4 Concrete/Grout 18
3.4.1 General Requirements 18
3.4.2 Concrete 19
3.4.3 Mortar and Grout 19
3.5 Locating Disk 19
3.6 Marking Tape 19
3.7 Casing Material and Spacers 19
3.8 Tracer Wire (REQUIRED) 20

SECTION IV – PIPE INSTALLATION & CONSTRUCTION 21

4.1 Safety 21
4.2 Handling of Materials 21
4.3 Inspection and Preparation of Pipe and Fittings 21
4.4 Cutting and Fitting of Pipe 21
4.5 Pipe Alignment and Grade 22
4.6 Temporary Plugs 22
4.7 Frost 22
4.8 Lowering of Material into the Trench 22
4.9 Installation of Pipe 23
4.9.1 General Requirements 23
4.9.2 Ductile Iron Pipe 23
4.9.3 Polyvinyl Chloride Pipe 24
4.9.4 Yelomine Pipe 24
4.9.5 Job-Mixed Concrete 24
4.9.6 Ready-Mixed Concrete 24
4.10 Manholes 24
4.11 Service Lines 25

SECTION V – TESTING AND ACCEPTANCE 26

5.1 General Requirements for Connections 26
5.1.1 Service Connections 26
5.1.2 Connections to Manholes 26
5.2 Testing – Sewer Mains 26
5.2.1 Alignment 26
5.2.2 Low Pressure Air Testing – General Requirements 26
5.2.3 Low Pressure Air Testing Procedure 26
5.3 Manhole Testing – General Requirements 28
5.3.1 Manhole Testing Procedure 28

5.4 Television Inspection – General Requirements 29
5.4.1 Inspection Format 29
5.4.2 CCTV Video Content 30
5.4.3 District Review 30
5.4.4 Correction of Deficiencies 30
5.5 Sewer Main Repairs 30
5.6 Protection of Existing Sewer System 30
5.7 Manhole Abandonment 31

SECTION VI – STANDARD FORMS AND DETAILS 32

FORM D1: PRE-CONSTRUCTION MEETING CHECKLIST FOR SEWER MAIN INSTALLATION 32
FORM D2: SEWER SYSTEM ACCEPTANCE PROCEDURE 32
FORM D3: SEWER PIPE CLEANING AND TELEVISING CUT SHEET 32
FORM D4: BILL OF SALE – SEWER MAIN 32
FORM D5: SEWER EASEMENT 32
FORM D6: LENDER'S CONSENT 32
D-01: STANDARD MANHOLE 32
D-02: DROP MANHOLE 32
D-03: BAR SCREEN MANHOLE 32
D-04: ANCHOR MANHOLE 32
D-05: CASING DETAIL 32
D-06: SEWER MAINTENANCE ACCESS 32
D-07: GROUNDWATER BARRIER 32
D-08: ARM DESIGN TURNAROUND 32
D-09: EASEMENT WIDTH DETAIL 32
D-10: SEWER PIPE INSULATION DETAIL 32
D-11: WATER AND SANITARY SEWER SEPARATION 32
D-12: DEAD END MANHOLE 32

SECTION I – GENERAL REQUIREMENTS

1.1 Authority

The Standard Specifications for Sewer Mains (the “Specifications”) are promulgated by the Two Rivers Metropolitan District (“District”). The interpretation and enforcement of the Specifications is hereby delegated to the District Regulations Administrator.

1.2 Effective Date of Specifications

The Specifications shall become effective immediately upon formal adoption by the District and shall supersede all former specifications for sewer main construction. The most current version of these Specifications is available at www.tworivershoa.com.

1.3 Revisions, Amendments, or Additions

The Specifications may be revised and/or amended. Such revisions, amendments, and additions shall be binding and in full force immediately upon formal adoption by the District.

1.4 Definitions

Please reference the Rules and Regulations for Water and Wastewater Service, Article II.

1.5 Development Approval and Infrastructure Acceptance

Please reference the Rules and Regulations for Water and Wastewater Service, Articles VI.

1.6 Variance

The District recognizes that the strict and literal interpretation of these Rules and Regulations may not be possible in all cases. Please refer to Appendix B for information on the Variance process.

SECTION II – COLLECTION SYSTEM DESIGN AND LAYOUT

2.1 General Requirements

The District requires an Overall Utility Site Plan of the project to be submitted indicating all utilities and their proposed locations for review prior to Construction Plan Approval. All plans submitted shall include a geotechnical report if requested by the District. The design and installation of all facilities shall ensure development of an integrated collection system.

2.2 Corrosion

Corrosive soils are present in the District's service area and may lead to the premature degradation of pipe materials and appurtenances. In the event that corrosive soils are found a corrosion protection plan must be approved by the District on a case-by-case basis.

2.2.1 Dissimilar Materials

Cathodic protection and insulation shall be installed as required by the District. Particular care shall be taken to insulate between dissimilar materials.

2.2.2 Insulating Joints

Whenever it is necessary to join pipe of dissimilar metal, or when designated by the District, a method of insulating against the passage of electrical current, approved by the District, shall be provided. Special care shall be exercised during the installation of these joints to prevent electrical conductivity across the joints.

2.3 Sizing Collection Mains

All mains shall be sized to collect and convey estimated peak wastewater flows of the ultimate population of the tributary area to be served. The applicant shall submit a design report prepared by a registered professional engineer that includes projected peak wastewater flow rates at buildout and a hydraulic evaluation of the collection system. Peak design flow rates shall be based on average per capita wastewater generation rates, a peaking factor, and shall include flow from infiltration. Per capita wastewater generation rates, peaking factors, and infiltration rates for hydraulic design will be provided on request by the District's Engineering Department. The projected peak flows in wastewater mains 12" in in diameter or smaller shall convey the flow at a depth of flow no greater than half of the inside diameter of the pipe (depth/Diameter not to exceed 0.50). Peak flows in wastewater mains 15" in diameter or larger shall convey

the flow at a depth of flow no greater than 3/4 of the inside diameter of the pipe (depth/Diameter not to exceed 0.75).

Hydraulic design shall be based upon a Manning's Formula, using a Roughness Coefficient or 'n' value of 0.013. All mains shall be designed to give mean velocities, when flowing full, of not less than two feet per second (2 fps) to insure self-cleaning, and maximum velocities of not more than ten feet per second (10 fps).

The District reserves the right to request oversized mains to provide service for projected future needs. The additional cost for the oversizing may be negotiated between the District and the Applicant and will be reviewed on a case-by-case basis.

2.4 Layout of the Collection System

2.4.1 Easement Width Requirements for Main Installations

All mains shall be installed in dedicated public street right-of-ways or dedicated sewer line easements. The installation of Public Wastewater facilities on developable lots or tracts intended for private use should be avoided to the extent practicable. The standard easement width for all mains shall be a minimum of 20 feet. The main shall be generally centered within the easement. The easement width shall be in accordance with Standard Detail D-09.

2.4.2 Minimum Size

All mains shall be a minimum of eight inches (8") in diameter. All sewer service lines shall be a minimum of four inches (4") in diameter, Refer to Appendix B for Wastewater Service Line Construction Specifications.

2.4.3 Depth of Bury

In general, mains are to be sufficiently deep to receive wastewater from basements and to prevent freezing. The minimum cover above a main shall be four feet six inches (4'-6"). For every foot of cover that is out of compliance with minimum cover requirements, the District will require the installation of 1-inch of insulation board per Appendix E Section 1.14. In addition to maintaining cover from the ground surface, specified cover is required from storm sewer crossings and other cold air sources. Additional depth may be required to allow for adequate cover on service lines. The Applicant shall demonstrate that the pipe materials are suitable for the proposed depth of installation. Any main installation greater than ten feet (10') shall require an increased wall thickness. Any proposed main installation greater than 14 feet (14') shall require an alternatives analysis submittal and District approval.

The maximum depth for a sewer manhole is fourteen feet (14') and shall be measured from the top of rim to the downstream invert. Any proposed applications with manholes

installed at a depth greater than fourteen feet (14') shall require an alternatives analysis submittal and District approval.

2.4.4 Main Insulation Requirements

For every foot of cover that is out of compliance with minimum cover requirements, the District will require the installation of 1-inch of insulation board per Appendix E Section 1.14. In addition to maintaining cover from the ground surface, specified cover is required from storm sewer crossings and other cold air sources.

2.4.5 Minimum Distance from Structures

All main extensions shall be installed at a minimum distance of ten feet (10') from all structures or at a one foot horizontal to one foot vertical (1:1) ratio from the bottom of any structural element, whichever is greater. Encroachments of structures into easements are discouraged and shall only be allowed by written authorization from the District.

2.4.6 Installations in High Groundwater

Installations in areas of high groundwater, as determined in the soils/geotechnical report, may require the following special provisions and evaluated on a case-by-case basis:

(a) Groundwater barriers, in order to prevent transmission of groundwater along the pipe bedding (See Standard Detail D-07).
(b) Use of C-900 or Yelomine pressure rated piping and joints
(c) Engineered design to prevent floatation of the main due to buoyant forces
(d) High groundwater manholes as identified in 3.3.2

2.5 Slope of Sewer Mains

2.5.1 Minimum Slopes

All sewer shall be designed and constructed to give mean velocities, when flowing full, of 2.0 feet per second or greater, based on Manning’s formula using an “n” value of 0.013.The following are the required minimum slopes for sewer mains 42 inches or less. However, slopes greater than these are desirable. If proposed slopes that are at or near the specified minimum, the District may require an increased slope to control sewer gases and/or to maintain self-cleaning velocities. See Table D-1 Minimum and Maximum Sewer Main Slopes.

2.5.2 Maximum Slopes

The maximum slope allowable in pipeline design will be based upon 10 feet per second maximum velocity. Lined pipes may be able to resist scour at high velocities, however, undue turbulence can become an over-riding design consideration as unacceptable levels of odors may be produced from hydrogen sulfide generation. See Table D-1 Minimum and Maximum Sewer Main Slopes.

Table D-1: Minimum and Maximum Sewer Main Slopes

Pipe Diameter (Inches)	Minimum Slope (Feet per 100 linear feet)	Maximum Slope (Feet per 100 linear feet)
8 inches	0.70	6.48
10 inches	0.28	4.82
12 inches	0.22	3.84
14 inches	0.17	3.08
15 inches	0.15	2.81
16 inches	0.14	2.58
18 inches	0.12	2.20
21 inches	0.10	1.79
24 inches	0.08	1.50
27 inches	0.067	1.29
30 inches	0.058	1.11
33 inches	0.052	0.98
36 inches	0.046	0.87
39 inches	0.041	0.79
42 inches	0.037	0.71

2.5.3 Slope between Manholes

A continuous slope shall be maintained on main installations between manholes. Manholes are required at every slope change of the main.

2.5.4 Steep Slope Applications

Steep slope applications with mains longer than 100 feet (100') are required to install a bar screen manhole at the top of the slope per Detail D-03. Grade breaks shall not be permitted in manholes in excess of ten percent (10%) at the bottom of steep slope applications. Mains shall be anchored securely to the manhole and installed with

restrained joint connections per Detail D-04. Sewer mains with slopes of twenty percent (20%) or greater shall require restrained joints to be designed by the Engineer.

2.5.5 Slope across Manholes

The minimum fall across a standard manhole shall be two-tenths of a foot (0.2'). The hydraulic grade line and energy grade line of flow in a manhole shall be designed to stay below the crown of the pipe.

2.5.6 Main Line Horizontal Alignment

All mains shall be installed with a straight horizontal alignment between manholes.

2.5.7 Length of Mains and Slope Measurement

Length of mains shall be measured horizontally, from the center of manhole structure to the center of the manhole structure, not the center of the manhole lid. Main slopes shall be calculated using the outside invert of the upstream manhole to the outside invert of the downstream manhole. These length and slope calculations shall be used for construction submittals as well as for the Drawings of Record submittal.

2.5.8 Manholes

Manholes shall be installed at the following locations:

(a) The end of each main
(b) All changes in grade, size, horizontal or vertical alignment
(c) Sanitary sewer manholes shall be aligned and spaced so that the change of flow direction is not at an acute angle.
(d) All intersections
(e) Main distances not greater than four-hundred feet (400')
(f) Manhole lids shall be located outside of the vehicle wheel path on all road installations

Manholes shall not be located in the following areas:

(a) Within ten feet (10’) of domestic water infrastructure
(b) Where surface water can accumulate (i.e. drainage pans, ditches, floodplains, etc.)
(c) Within a 100-year floodplain

The manhole access opening shall be a minimum of twenty four inches (24") in diameter. The minimum manhole diameter size shall be based on the largest main penetrating the manhole and adhere to the following:

Table D-2: Manhole Sizing Criteria

Main Diameter	Minimum Manhole Diameter
8 to 18 inches	48-inch
21 to 27 inches	60-inch
30 inches and above	72-inch

Bar screen manholes may be required in new developments to prevent construction debris from entering the collection system. Bar screen manholes shall be required in steep slope applications. Refer to Detail D-03.

Inside Drop manholes shall not be permitted and outside drop manholes will be considered on a case-by-case basis. If a drop manhole is approved, it shall be provided for where a main enters a manhole twenty-four inches (24”) or more above the manhole invert. Refer to Standard Detail D-02.

2.5.9 Manhole Clearances

Manholes must be exposed and accessible at all times. A minimum clearance of three (3) feet from the rim of the manhole to the face of any surface obstruction object must be met. The 3 foot minimum must be level. Manholes are not permitted to be in low spots or holes. If the required clearances are not met, Two Rivers Metro District personnel will remove such obstructions after seven (7) days written notice is given or immediately in cases of emergency, the costs for which may be added as a charge to the property owner’s monthly bill.

2.5.10 Manhole Connections

Any new main connection eight inches (8”) or greater within a manhole shall match the crown of pipe to crown of pipe at the highest existing main currently within the manhole.

2.5.11 Location/Marking Tape

All lines connected to District mains in any way shall be marked with the appropriate marking tape per Section 3.6 and shall be placed twenty four inches (24") above the pipe.

2.5.12 Pipe Material

The District requires the same pipe material to be installed from manhole to manhole.

2.5.13 Lift Stations

Lift stations are specifically discouraged. In the event lift stations are approved by the District, they shall be considered Major Facilities and will be designed, constructed and financed by the District in accordance with Article IV.

2.5.14 Maintenance Access

All mains, whether in easements or right-of-way, shall allow for vehicular access to conduct maintenance activities. Access benches shall have a minimum width of twelve feet (12'), a centerline grade of no more than ten percent (10%), and a maximum cross slope of six percent (6%) per Detail D-06. Vehicular turnarounds shall be provided at all dead-end mains in conformance with Detail D-08.

2.6 Protection of Potable Water Supplies

When wastewater mains are proposed near any potable water supply facilities, the following requirements of the Colorado Department of Public Health and Environment's (CDPHE) Potable Water System Design Criterial Manual shall apply:

2.6.1 Cross Connections Prohibited

There shall be no physical connections between a public or private potable water supply system and a main or appurtenance thereto which would permit the passage of any wastewater or polluted water into the potable supply. No water pipe shall pass through or come into contact with any part of a sewer main or manhole. There shall be no physical connections between a stormwater conveyance system and a main or appurtenance thereto which would permit the passage of any storm water into the wastewater collection system. No stormwater water pipe shall pass through or come into contact with any part of a sewer main or manhole.

2.6.2 Relation to Water Works Structures

Minimum distances from public water supply wells or other water supply sources and structures shall be provided.

2.6.3 Horizontal and Vertical Separation from Potable Water Mains

Refer to detail D-11.

(a) Parallel Main Installations and Appurtenances:

Sewer mains and sewer service lines shall be installed at least ten feet (10') horizontally from any existing or proposed water main. The distance shall be measured edge to edge. In cases where it is not practical to maintain a ten foot (10') separation, the

District may allow installation of the sewer main closer to a water main utilizing encasement or pressure rated joints, provided that the water main is on a separate trench or on an undisturbed earth shelf located on one side of the main and at an elevation so the bottom of the water main is at least eighteen inches (18") above the top of the sewer main. The District requires a ten-foot (10') separation between water and sewer appurtenances including manholes. If a manhole is installed, it will be measured from outside of manhole to outside of water attribute.

(b) Perpendicular Crossings – Sewer under Water:

If the sewer pipe crosses under the water main but less than eighteen inches (18”) of clear space will exist, either the water main or sewer main must be installed with secondary containment. Acceptable options include a pipe casing extending no less than nine feet (9’) each side of the crossing. The pipe casing shall be of watertight material with no joints. The casing pipe materials may be steel, ductile iron, fiberglass, fiberglass reinforced polymer mortar (FRPM), or polyvinylchloride (PVC) with suitable carrier pipe supports and casing pipe end seals. Alternatively, concrete or Controlled Low Strength Material (ex. flowable fill) encasement of either pipe extending no less than ten-feet (10’) each side of the crossing may be used.

(c) Perpendicular Crossings – Water under Sewer:

If the sewer pipe will cross above or over the water main, either the sewer pipe or water pipe shall be installed with secondary containment unless the vertical distance exceeds five feet (5’). Acceptable options include a pipe casing extending no less than 9- feet each side of the crossing. The casing must be a single section of steel or ductile iron pipe. The design must include a means to support the interceptor or sewer main to prevent settlement and permit maintenance of the water main without damage to the sewer pipe. Alternatively, concrete or Controlled Low Strength Material (ex. flowable fill) encasement of either pipe extending no less than 10-feet each side of the crossing may be used. Crossings involving jointless pipe such as HDPE, fusible PVE or welded steel do not require installation of secondary containment.

SECTION III – MATERIAL SPECIFICATIONS

3.1 General Requirements

All materials must conform to these Material Specifications and shall be new and undamaged.

Acceptance of materials, or the waiving of inspection thereof, shall in no way relieve the Applicant of the responsibility for furnishing materials that meet the requirements of these Specifications.

3.2 Pipe and Fittings

The following materials are approved for District mains:

3.2.1 Polyvinyl Chloride (PVC) gravity pipe

Main installations from eight to fifteen inches (8" to 15") in diameter shall conform to ASTM D3034, and shall be either SDR-35/PS46 or SDR-26/PS115.

Main installations from eighteen to twenty-seven inches (18" to 27") in diameter shall conform to ASTM F679 and shall be SDR-26/P115. Push on joints and molded rubber gaskets shall conform to ASTM D3212.

Maximum pipe segment lengths shall be twenty feet (20'). Joint lubricant shall be non-toxic and water-soluble and supplied by the pipe manufacturer.

3.2.2 Polyvinyl Chloride (PVC) pressure pipe

(a) Yelomine

Yelomine pipe shall be SDR-21, restrained joint PVC pressure pipe and fittings having a minimum cell classification of 12454 as defined in ASTM D1784 and materials in conformance with ASTM D2241.

(b) C-900

AWWA C-900 pipe may be used for 8 " through 12" diameter pipe, and shall be pressure class 235 psi, DR18, with push-on joints and flexible elastomeric seals ASTM D3139/ASTM F477. All spigot ends shall be beveled to manufacturer's specifications with gaskets meeting ASTM F477 and joints in compliance with ASTM D3139.

3.2.3 Ductile Iron Pipe (DIP)

Ductile Iron Pipe shall be per ASTM A746, Class 52, 350 psi, AWWAC151. Push-on joints shall be ANSI/AWWA C111/A21.11. Factory applied Protecto 401, or equivalent, ceramic epoxy interior lining for DIP & fittings. Manufactured by U.S. Pipe and Foundry Company/Griffin Pipe Products or approved equal.

3.2.4 Service Line Taps

Factory wyes shall be used for all service line connections with new main installations See below for requirements for new service line connections to existing mains.

The connection of the Wastewater Service to the Wastewater Main shall be made as follows:

(a) A factory wye shall be installed on all new mainline installations for service line stub outs on gravity mains. The wye shall be located no closer than ten (10) feet from a manhole. A saddle tap, provided by the District, shall be used on new service line connections to existing mainlines. All service connections shall be above spring line.

(b) On four inch (4”) or six inch (6”) diameter new service connections to existing mains, a saddle connection is required. The saddle connection shall be located no closer than ten (10) feet from a manhole. The flow line of the Service pipe shall enter the Main above the spring line of the Main. Connections into manholes are prohibited. All Connections up to six (6) inches in diameter shall be made by District personnel.

(c) If the Service pipe is eight (8) inches or greater in diameter, the connection shall be made into an existing manhole or into a new manhole placed on the existing Main. Connections eight (8) inches or greater in diameter shall be made by a qualified contractor on behalf of the Customer and witnessed and inspected by a District Inspector

3.2.5 Transition Adapter

If permitted on a case-by-case basis, Harco transition adapters or Shear Guard couplers may be used for pipe material transitions with prior approval. Fernco couplers shall not be permitted.

3.3 Manholes

3.3.1 Manhole

Manhole sections, base, riser, conical top sections, flat slab tops, and joint sealants between manhole sections shall be in accordance with ASTM C 478. Concrete used in cast in place-manhole bases shall be per Section 3.3.10. All cone sections shall be the eccentric type. Openings through manhole risers shall be cored or cast-in, and access opening shall be twenty four-inch (24”) diameter. Flat lid slabs are required on manholes with a depth of less than five feet (5') and must be eccentric.

3.3.2 Water Tightness

Manholes shall be watertight and constructed of precast concrete. Barrel sections, cones and frame joints shall all be sealed with a double Rub R Nek, or other equivalent material approved by the District. In areas of high groundwater or otherwise required by the District, a bituminous coating, or approved equal waterproofing material, shall be applied to the exterior of the manhole. Manhole vacuum testing shall be required by the District on all manholes in all areas of high groundwater.

3.3.3 Rings and Covers

Manhole rings and covers shall be heavy duty castings ASTM A 536 or gray cast iron per ASTM A 48 and all components shall be traffic rated to AASHTO HS-20. Ring and cover combined weight shall be greater than 245 pounds and machined to fit securely with a non-rocking cover. Manhole covers shall be twenty-four inch (24”) in diameter and have a minimum of twenty-two and one-eighth inches (22-1/8") diameter clearance, have a waffle pattern with a flat lid and the lettering "SEWER" cast on the cover. Covers shall be D & L brand model A-1043 or accepted equal. Precision Cover Systems, Inc. (PCSI) fully-adjustable manhole covers with variable grade rings shall be installed in roadways.

3.3.4 Grade Rings

Grade rings shall be in accordance with ASTM C 478 and the maximum height of grade rings shall not exceed eleven inches (11”).

3.3.5 Manhole steps

Steps shall be comprised of grade 60 deformed rebar encased in a polypropylene copolymer plastic with a tread width of fourteen inches (14”). The steps shall be M.A. Industries No. PS2-PF or PS2-PF-DF or approved equal. Steps shall be cast in place during manufacturing of the manhole sections and shall be six inches (6") from face of manhole. The top most step shall be installed between eighteen (18”) and twenty-four inches (24”) from the rim of the manhole. Manhole steps shall be vertically aligned and

plumb. Steps shall be typically spaced at twelve inches on-center vertically with a maximum spacing of sixteen inches (16”). Steps shall not be installed in the "chimney" portion of the manhole. Entry steps shall be located in the barrel and cone sections of the manhole. See Standard Manhole Detail D-01.

3.3.6 Joint Sealant

Joints shall be sealed with Rub-R-Nek LTM or approved equal installed on the inner and outer ring. Sealant shall be a flexible gasket-type of Butyl rubber, Federal Specifications SS-S-210 (210-A), per ASTM C990-09, AASHTO M-198 75 1. Sealant shall be applied on all surfaces between precast concrete adjusting ring and casting, individual precast concrete adjusting rings, and precast concrete adjusting ring and cone joints. A compatible primer or solvent as recommended by manufacturer of butyl base material shall be used to prepare surfaces prior to application of butyl base material and riser rings. Two gaskets with a minimum cross sectional area equivalent to one inch (1”) in diameter are required per joint on forty-eight inch (48”) diameter manholes. Gaskets for manholes greater than forty-eight inches (48”) in diameter shall have a minimum cross sectional area of one and one-half inches (1 ½”).

3.3.7 Pipe to Manhole Seal

KOR-N-Seal, A-Lok, or approved equal flexible rubber boot in a cored hole per ASTM C 923 shall be used for installations in pre-cast bases.

For installations in cast-in-place bases (upon approval and on existing mains only), all pipe-to-manhole connections shall use two elastomeric Kor-N-Seal, or approved equal, “O”-ring water stops minimum per ASTM F477.

3.3.8 Flow Channel

The flow channel straight through a manhole should be made to conform as closely as possible in shape and slope to that of the connecting mains and shall have two tenths of a foot (0.2’) minimum fall through the channel for a standard manhole. Channel depth and width shall equal the largest pipe diameter. The channel walls should be formed or shaped to the full height of the crown of the outlet main in such a manner as to not obstruct maintenance, inspection or flow in the sewers.

3.3.9 Bench

All manholes shall be constructed with a full bench configuration, in which the top of the invert channel walls shall match the crown of pipe elevation. The horizontal bench surface shall be sloped at a minimum of one-half inch (½”) per foot, maximum of one

inch (1”) per foot with a medium broomed finish, perpendicular to the main direction of flow.

3.3.10 Manhole Base

The foundation for each manhole base shall be prepared by replacing unsuitable material with sub grade stabilization material in accordance with Appendix E-Earthwork.

The manhole base shall be precast (in accordance with ASTM C478) unless the manhole ties into an existing main, in which case a cast-in-place base may be used. The invert shall be formed and smoothly finished to match the shape and elevation of all pipes connected to the manhole. Where the sewer line is designed with a continuous grade through the manhole, the pipe shall be laid through the manhole location, the top half of the pipe cut out and the manhole base formed around the bottom half of the pipe.

All concrete used in construction of cast-in-place manholes and bases shall be CDOT Class D. Concrete reinforcement shall be epoxy-coated steel reinforcing bars in accordance with ASTM A-615, Grade 60. In instances where a manhole ties into an existing main and a cast-in-place base is used, the first pre-cast manhole section shall be placed on the concrete base structure before the base has taken initial set, or the section shall be grouted into a suitable groove formed in the top of the manhole base. The first section shall be adjusted to the proper grade and alignment so that it is uniformly supported by the base concrete and not bearing on any of the pipes. The manhole steps shall be located one-foot left or right of the main inflow pipe.

The remaining pre-cast sections shall be placed and aligned to provide vertical sides and alignment of the ladder rungs. Plumbness shall be checked as each barrel section is added. A bitumastic or other approved sealer shall be placed between pre-cast sections so that the completed manhole is rigid and watertight. The sealer shall be placed both on the inside lip as well as the outside lip of each section.

3.3.11 Interior Coatings

For drop manholes (or other applications as identified by the District), manhole interiors shall be coated with a Polyamidoamine Epoxy Primer with Polyamidoamine Epoxy Top Coat such as Tnemec Epoxoline Series L69 or equivalent. Preparation and application shall be per manufacturers’ recommendations.

3.4 Concrete/Grout

3.4.1 General Requirements

Contractor shall provide the District Inspector with a specification sheet or mix design from the concrete supplier.

3.4.2 Concrete

All concrete used in construction of cast-in-place manholes and bases shall be CDOT Class D. Construction shall be in conformance with the Detail D-01.

3.4.3 Mortar and Grout

Non-shrink mortar and grout used in the shaping of inverts, grade ring gaps, sealing penetrations, or setting and anchoring cast iron shall consist of one part Type II Portland Cement and two parts of fine, clean sand. Only sufficient water shall be added to provide a stiff, workable cement mixture for proper troweling. Hydrate lime or masonry cement shall not be used. Where relatively thin portions of grout are to be applied (to a flow channel or top of bench) an approved epoxy bonding coat shall be applied to the exposed concrete surfaces prior to grouting.

3.5 Locating Disk

In the event that the District provides green 3M brand Full-Range Disk Marker locating disks to the contractor for stub outs. The contractor shall ensure their correct installation.

3.6 Marking Tape

The installation of green marking tape is required on all sewer mains and service lines. The tape shall be installed approximately 24 inches (24”) above the main or line. The tape shall meet the following specifications:

(a) Five (5)-mil thick Polyethylene material.
(b) Solid green color with black lettering.
(c) Six inches (6") in width.

3.7 Casing Material and Spacers

Carrier pipes to be installed inside casings shall be installed with self-restraining casing spacers. Casing spacers shall provide axial thrust restraint to prevent pipe joint deflection during and after installation. They shall also provide dielectric insulation between the carrier pipe and the casing and facilitate installation of the carrier pipe into the casing. See Sewer Main Casing Detail D-5. Pipe casing shall be smooth wall welded steel ASTM A-53 Grade B cylinder fabricated in accordance with AWWA C200. External loading shall be AASHTO HS-20 highway or E-80 railroad loading, railroad loading plus jacking load. Casing joints shall have ends beveled for field welding, be butt welded with complete joint penetration welds around the entire circumference of the pipe, and be formed and accurately manufactured so that when pipes are placed

together and welded they form a continuous casing with a smooth and uniform interior surface. Interlocking joints shall be Permalok Interlocking Pipe Joining System. Casing spacers shall be stainless steel, two piece bolt-on style, minimum fourteen (14) gauge thickness and a minimum length of eleven inch (11”); casing spacers shall be installed every six feet (6’) of the pipeline to support the pipe barrel and the weight of its contents, or at an appropriate spacing as determined by the engineer. The four runners shall be eleven inches (11”) long at a minimum and manufactured of high abrasion resistant, low coefficient of friction, glass filled polymer. Runner heights shall be set to center the carrier pipe in the casing. Risers shall be ten (10) gauge maximum, and the coating shall be fusion-bonded epoxy or heat fused PVC. Casing spacer models shall be Uni-Flange Series UFRCS1300, Advance Products and Systems, Inc. SI-12; Pipeline Seal and Insulator, Inc. C12G or approved equivalent. Restrained casing spacers shall be provided at all pipe joints. Restrained casing spacers shall be Uni-Flange Series UFRCS1390 P or approved equivalent.

Casing end seals shall be preformed and designed to prevent entry of water or loss of material from casing. The end seals shall be made of one-eighth inch (1/8”) thick 60 durometer EPDM or neoprene rubber held together with mastic strips to seal the edges. The seals shall overlap the casing pipe by two inches (2”) and shall be held on with AISI 304L stainless steel worm gear clamps. Casing end seals shall be Advance Products and Systems, Inc. AC or AW; Pipeline Seal and Insulator, Inc. C or W; or approved equivalent.

3.8 Tracer Wire (REQUIRED)

See Appendix E

4.1 Safety

Job site safety shall be the responsibility of the contractor. The District Inspector may refuse to enter a jobsite if deemed unsafe by Occupational Health and Safety Act (OSHA) standards. Failure to provide a safe jobsite may prevent the District from conducting an inspection.

4.2 Handling of Materials

Pipe and fittings shall be loaded and unloaded by lifting so as to avoid shock or damage. Under no circumstances shall material be dropped. If, however, any part of the pipe is damaged, the replacement or repair of the damaged pipe shall be done to the satisfaction of the District. Any pipe or fittings that are not acceptable to the District shall be removed from the job site immediately. All pipe-handling equipment and pipe handling methods shall be in accordance with the methods and equipment recommended by the manufacturer.

Under NO circumstance shall forks be inserted into any pipe and or fitting.
Pipe shall be stored and handled in accordance with manufacturer's recommendations. Any pipe with UV degradation or bowing may be rejected by the District Inspector. All pipe shall be delivered to the project site and stored with factory applied end caps intact.

4.3 Inspection and Preparation of Pipe and Fittings

Before placing pipe in the trench, each pipe or fitting shall be thoroughly cleaned of all foreign material, kept clean at all times thereafter, and carefully examined for cracks, warping, or any other defects before installation. Bell ends and spigot ends are to be examined and free of defects. Following the inspection, end caps shall be replaced prior to placing the pipe in the trench.

All lumps, blisters and excess coatings shall be removed from the pipe and fitting, and the outside of the spigot and the inside of the bell shall be wiped clean, dry and free from oil and grease before the pipe or fitting is installed. Dirt and any other material must be removed from the barrel of the pipe before installation.

4.4 Cutting and Fitting of Pipe

Pipe shall be cut in accordance with manufacturer's recommendations, whenever necessary, to conform to location of fittings, line, or grade. All cuts, when required, shall be straight, true and beveled and may be made with plastic pipe cutters or completed per the DIPRA Guidelines for Field Welding and Cutting Ductile Iron Pipe (August 2015).

All burrs shall be removed from the ends of cut pipe and the ends of the pipe lightly rasped or filed.

4.5 Pipe Alignment and Grade

Manholes shall be installed at staked locations and elevations. Main installation stakes for alignment and grade shall be set by a surveyor under the guidance of a Professional Land Surveyor who is registered in the State of Colorado.

Pipe shall be installed at a constant grade from manhole to manhole. No grade breaks or low spots will be accepted. Pipe shall be installed with the bell ends facing in the direction of installation, unless directed otherwise by the District. Where pipe is to be installed on a grade of ten percent (10%) or greater, the installation shall start at the bottom and shall proceed upward with the bell ends of the pipe up grade.

4.6 Temporary Plugs

A mechanical pipe plug shall be used as a temporary plug during line installation to isolate the mainline extension from the existing collection system. All temporary plugs shall be provided by the Contractor.

4.7 Frost

No pipe or appurtenant structure shall be installed upon a foundation into which frost has penetrated, or if at any time there is danger of ice formation. No pipe or appurtenant structure shall be installed unless backfilling can be completed before the formation of ice and frost.

4.8 Lowering of Material into the Trench

Proper implements, tools and facilities satisfactory to the District shall be provided and used by the Contractor for the safe and convenient performance of the work. All pipe, manholes, and accessories shall be carefully lowered into the trench piece by piece by means of suitable tools and equipment, in such a manner as to prevent damage to the materials. Under no circumstances shall the materials be dropped or dumped into the trench.

If damage occurs to any pipe, manholes or main accessories in handling, the District inspector may reject the damaged material at the discretion of the inspector.

4.9 Installation of Pipe

4.9.1 General Requirements

Factory applied end caps shall remain installed on the pipe while it is being placed in the trench to prevent foreign material from entering the pipe. The end cap shall be left in place until the connection is to be made to the adjacent pipe. During installation, no debris, tools, clothing or other foreign materials shall be placed in the pipe.

As each length of pipe is placed in the trench, the spigot end shall be centered in the bell and the pipe inserted to the manufacturer's recommended depth with a slow steady pressure without jerky or jolting movements and brought to correct line and grade. The pipe shall be secured in place with bedding material tamped under it, except at the bells. Precautions shall be taken to prevent dirt from entering the joint space. No wooden blocking shall be left at any point under the pipeline. All pipe joints shall be uniform and smooth transitions shall exist from joint to joint or fitting. See Appendix E for bedding, backfill and compaction requirements.

4.9.2 Ductile Iron Pipe

Push-On Joints: The inside of the bell, the outside of the spigot end, and the rubber gasket shall be thoroughly cleaned to remove oil, grit, excess coating, and other foreign matter. The rubber gasket shall be flexed inward and inserted into the gasket recess of the bell socket. NSF-61 approved gasket lubricant per the manufacturers recommendations shall be applied to either the inside face of the gasket, and the spigot end of the pipe, per the manufacturer's recommendations.

The spigot end of the pipe shall be placed in the bell end with care to prevent the joint from contacting the ground. Pipe furnished without a depth mark on the spigot end shall be marked before assembly to ensure insertion to the manufacturer's recommended depth. The pipe shall be kept in straight alignment and the joint shall be completed by inserting the pipe to the manufacturer's recommended depth with a slow, steady pressure by using a long pry bar, jack, lever puller, or backhoe bucket. A timber header should be used between the pipe and the jack or backhoe bucket to avoid damage to the pipe.

Upon completion of joining push-on joint pipe, an inspection shall be made to ensure that the gasket is correctly aligned in the gasket recess of the bell socket and not twisted or turned.

4.9.3 Polyvinyl Chloride Pipe

Elastomeric Gasket Joints: Immediately before joining two (2) lengths of PVC pipe, the inside of the bell or coupling, the outside of the spigot and the elastomeric gasket shall be thoroughly cleaned to remove all foreign material.

Lubrication of the joint and rubber gasket shall be done in accordance with the pipe manufacturer's specifications.

Care shall be taken that the correct elastomeric gasket, compatible with the annular groove of the bell, is used. Insertion of the elastomeric gasket in the annular groove of the bell or coupling must be in accordance with the manufacturer's recommendations.

The spigot and bell or coupling shall be aligned and inserted to the manufacturer’s recommended depth or reference line. Installation or pushing shall be done in a smooth, steady motion. Upon completion of joining the pipe, an inspection shall be made to assure that the gasket is correctly aligned in the gasket recess of the bell socket and not twisted or turned. NO deflection will be allowed at a joint of PVC pipe.

4.9.4 Yelomine Pipe

Installation of Yelomine pipe shall be in accordance with the manufacturer's recommendations and specifications. Cleanout caps shall be installed with non-permanent gaskets where applicable.

4.9.5 Job-Mixed Concrete

Job-mixed concrete shall be thoroughly mixed to combine aggregates, cement, and water into a uniform mass.

4.9.6 Ready-Mixed Concrete

Said materials must be proportioned, mixed and transported in accordance with ASTM C94. Any concrete not plastic and workable when it reaches project shall be rejected. See Section 3.4 for material specifications.

4.10 Manholes

Manholes shall be precast, watertight and constructed in accordance with the District's standard details and per Section 3.3. For precast manhole bases, the area underneath the manhole base shall be excavated and bedding material shall be placed and compacted to the required elevation. The manhole base shall then be lowered into the trench and checked for proper bearing on the subgrade, proper elevation and orientation to receive the incoming and outgoing sewers at the designated invert

elevation. If the invert elevation varies by more than plus or minus one half inch (1/2”) from the designated invert elevation, the base shall be removed and reset. The concrete invert channel and bench shall be constructed following the connection of all sewer pipes to the manhole. The flow channel shall be smooth and true to the sewer pipe invert elevations, with uniform cross section and slope, either straight or with a continuous curve between inlet and outlet of pipes. To eliminate free fall conditions in a manhole resulting from invert elevation differentials between incoming and outgoing pipes, the Contractor shall form and construct suitable channels in the bottom of the manhole connecting the inverts. Shape channel base and bench per Sections 3.3.8 and 3.3.9, respectively. New manholes shall have pre-formed holes for pipe installation and existing manholes shall be cored to install pipe and connector. Chip existing concrete bench inside manhole and shape smooth continuous invert for connections to existing manholes. All pipe-to-manhole connections and grade adjustment rings shall be sealed and grouted with non-shrink materials and be watertight. All lift holes shall be filled with non-shrink grout.

All dimensions, locations and elevations shall be coordinated by the Applicant and Contractor and meet the requirements of the District. Cast-in-place manhole bases will only be allowed when connecting to an existing main.

4.11 Service Lines

Refer to Appendix B.

SECTION V – TESTING AND ACCEPTANCE

5.1 General Requirements for Connections

Connections to the District system shall be inspected and approved by the District prior to backfilling.

5.1.1 Service Connections

Refer to Article IV.

5.1.2 Connections to Manholes

All connections shall match the crown of pipe to crown of pipe at the highest existing main or per the direction of the District. All new main installations shall require reformed benches that meet all District standards.

5.2 Testing – Sewer Mains

5.2.1 Alignment

Straight alignment shall be checked by using either a laser beam or lamping.

5.2.2 Low Pressure Air Testing – General Requirements

The air test shall, as a minimum, conform to the test procedure described in ASTM F 1417 Standard Practice for Installation Acceptance of Plastic Non-Pressure Sewer Lines Using Low-Pressure Air. Deflection testing should occur prior to air test.

5.2.3 Low Pressure Air Testing Procedure

(a) Lines must be cleaned by flushing or by other means before the low pressure air test is to begin.

(b) Isolate the sewer line to be tested and ensure that all other outlets from which air could escape are properly sealed. In this step of the procedure, it is necessary to inspect the manhole invert being plugged to be sure that it has no damage which will be covered by the plug and not detected with the low-pressure air test.

(c) Determine the duration of the test by using the accompanying tables at the end of this section.

(d) Begin the test by connecting the air source to the inlet tap. Slowly add air until the internal pressure of the test section reaches a pressure 4.0 psig. If ground water back pressure exists, it must be quantified by the Engineer prior to testing.

(e) After the constant pressure of 4.0 psig is obtained, regulate the air supply so that the pressure is maintained between 3.5 to 4.0 psig for at least 2 min. Depending on air/ground temperature conditions, the internal air temperature will stabilize in equilibrium with the temperature of the pipe walls. The pressure will normally drop slightly until equilibrium is obtained; however, a minimum of 3.5 psig is required.

(f) Once the pressure has stabilized to 4.0 psig (plus the average ground water back pressure, if applicable) disconnect the air supply from the control panel. Observe the continuous monitoring gauge and decrease the internal pressure to no less than 3.5 psig. At a reading of 3.5 psig or within the range of 3.5 to 4.0 psig, stop decreasing the pressure and commence timing with a stopwatch or watch with a second hand or digital readout in minutes and seconds with an accuracy of 0.1.s.

(g) Once the predetermined time period from the formula or table above has elapsed, observe the continuous monitoring gauge to obtain the amount of pressure lost during the test duration. If the pressure drop is found to be less than 1.0 psig (or 0.5 psig in circumstances where a shorter test duration is desired), the section is presumed to be free of any leaks or defective joints. If the pressure drop is 1.0 psig or greater (0.5 psig or greater in circumstances where a shorter test duration is desired), the test section has failed due to excessive pressure loss. When low-pressure air testing of a sewer line results in a failure the Contractor, at his/her own expense, shall detect the leak or defect and repair or replace whatever is necessary to remedy such defect in a manner acceptable to the Owner.

TABLE D-3: Minimum Time for a 1.0 psig Pressure Drop for Size and Length of Pipe for *Q* = 0.0015

Pipe Diameter, in.	Minimum Time, min: s	Length for Minimum Time, ft	Time for Longer Length, s	Specification Time for Length (L) Shown, min:s							
				100 ft	150 ft	200 ft	250 ft	300 ft	350 ft	400 ft	450 ft
4	3:46	597	0.380 L	3:46	3:46	3:46	3:46	3:46	3:46	3:46	3:46
6	5:40	398	0.854 L	5:40	5:40	5:40	5:40	5:40	5:40	5:42	6:24
8	7:34	298	1.520 L	7:34	7:34	7:34	7:34	7:36	8:52	10:08	11:24
10	9:26	239	2.374 L	9:26	9:26	9:26	9:53	11:52	13:51	15:49	17:48
12	11:20	199	3.418 L	11:20	11:20	11:24	14:15	17:05	19:56	22:47	25:38
15	14:10	159	5.342 L	14:10	14:10	17:48	22:15	26:42	31:09	35:36	40:04
18	17:00	133	7.692 L	17:00	19:13	25:38	32:03	38:27	44:52	51:16	57:41
21	19:50	114	10.470 L	19:50	26:10	34:54	43:37	52:21	61:00	69:48	78:31
24	22:40	99	13.674 L	22:47	34:11	45:34	56:58	68:22	79:46	91:10	102:33
27	25:30	88	17.306 L	28:51	43:16	57:41	72:07	86:32	100:57	115:22	129:48
30	28:20	80	21.366 L	35:37	53:25	71:13	89:02	106:50	124:38	142:26	160:15

NOTE 1—See Practice UNI-B-6.

NOTE 2—Consult with pipe and appurtenance manufacturer for maximum test pressure for pipe size greater than 30 in. in diameter.

Table D-4: Minimum Time for a 0.5 psig Pressure Drop for Size and Length of Pipe for Q = 0.0015

Pipe Diameter, in.	Minimum Time, min:s	Length for Minimum Time, ft	Time for Longer Length, s	Specification Time for Length (L) Shown, min:s							
				100 ft	150 ft	200 ft	250 ft	300 ft	350 ft	400 ft	450 ft
4	1:53	597	0.190 L	1:53	1:53	1:53	1:53	1:53	1:53	1:53	1:53
6	2:50	398	0.427 L	2:50	2:50	2:50	2:50	2:50	2:50	2:51	3:12
8	3:47	298	0.760 L	3:47	3:47	3:47	3:47	3:48	4:26	5:04	5:42
10	4:43	239	1.187 L	4:43	4:43	4:43	4:57	5:56	6:55	7:54	8:54
12	5:40	199	1.709 L	5:40	5:40	5:42	7:08	8:33	9:58	11:24	12:50
15	7:05	159	2.671 L	7:05	7:05	8:54	11:08	13:21	15:35	17:48	20:02
18	8:30	133	3.846 L	8:30	9:37	12:49	16:01	19:14	22:26	25:38	28:51
21	9:55	114	5.235 L	9:55	13:05	17:27	21:49	26:11	30:32	34:54	39:16
24	11:20	99	6.837 L	11:24	17:57	22:48	28:30	34:11	39:53	45:35	51:17
27	12:45	88	8.653 L	14:25	21:38	28:51	36:04	43:16	50:30	57:42	64:54
30	14:10	80	10.683 L	17:48	26:43	35:37	44:31	53:25	62:19	71:13	80:07

NOTE 1—Consult with pipe and appurtenance manufacturer for maximum test pressure for pipe size greater than 30 in. in diameter.

5.3 Manhole Testing – General Requirements

Manhole vacuum testing shall be required by the District on all manholes in all areas of high groundwater via the vacuum test per ASTM C1244, “Standard Test Method for Concrete Sewer Manholes by the Negative Air Pressure (Vacuum) prior to backfill.

5.3.1 Manhole Testing Procedure

(a) Plug all inlets and outlets.

(b) Install the vacuum tester head assembly on the manhole.

(c) Attach the vacuum pump assembly to the proper connection on the test head assembly. Make sure the vacuum inlet/outlet valve is in the closed position.

(d) Inflate the sealing element to twice the test pressure to be used. Do not over inflate.

(e) Start the vacuum pump assembly engine and allow preset RPMs to stabilize.

(f) Open the inlet/outlet ball valve and evacuate the manhole to ten-inch (10") Hg (mercury) that is equivalent to approximately 5 PSIG (0.3 bar) backpressure.

(g) Close the vacuum inlet/outlet ball valve, disconnect the vacuum pump and monitor the vacuum for one (1) minute.

(h) Allowable leakage - less than one-inch (1") Mercury (Hg) in one (1) minute.

(i) All manholes that do not meet the minimum amount for the leakage rests must be repaired and re-tested.

5.4 Television Inspection – General Requirements

Prior to construction/final acceptance of any sanitary sewer line by the District, the main shall be inspected internally by television as outlined in this Section. Leakage testing shall be performed prior to televising. The complete job is ready for television inspection when the following work has been completed.

(a) All sewer pipelines are installed and backfilled.

(b) All attributes are in place, all inverts are complete and pipelines are accessible.

(c) All other underground facilities, utility piping and conduits are installed.

(d) Pipelines have been jet cleaned.

(e) Final air test has been completed.

When the above work is complete, the Contractor shall arrange for the television inspection. The Contractor of the project will notify the District in writing as to the scheduled date of the television inspection.

After conditions a through e as outlined above, are met, the entire job will be televised.

(a) A video. accompanied by Standard Form 6.3 shall document defects requiring correction.

(b) If no deficiencies are observed, the work will be considered satisfactory.

There is no acceptance tolerance for defects such as high and low spots, joint separations, offset joints, chipped ends, cracked or damaged pipe, dimples or bumps in the pipe, or groundwater infiltration.

5.4.1 Inspection Format

Sanitary sewer lines shall be inspected by means of remote CCTV. All CCTV work shall conform to current NASSCO-PACP standards. Contractor shall provide the District with CCTV inspections (video and data collected) entirely in electronic format. Mains shall be tested with three and a half (3.5) gallons of water per minute flowing during televising and shall follow the direction of flow. The camera must be centered in the pipe and the speed of travel shall be slow enough to inspect each pipe joint, and tee connection, and should not, at any time, be faster than 30 feet per minute. The documentation of the work shall consist of PACP CCTV Reports, PACP database, logs, electronic reports, etc. noting important features encountered during the inspection. All CCTV video observations shall be identified by audio and recorded on the District Standard Form 6.3 and is required to accompany each submittal.

5.4.2 CCTV Video Content

Submitted CCTV videos shall include:

(a) Footage indicator
(b) Running time
(c) Date
(d) Location
(e) Beginning (upstream) and ending (downstream) manhole numbers for each run. Manhole numbers corresponding with the District's GIS mapping system shall be obtained by the District field inspector.

5.4.3 District Review

The Contractor will be notified in writing of any deficiencies revealed by the television inspection that require repair. If corrective work is indicated and the Contractor wishes to view CCTV videos, he shall contact the District to set a time for the viewing.

5.4.4 Correction of Deficiencies

Those segments of the pipeline system that have been corrected must be re-televised. The procedure outlined in above will be repeated until all deficiencies observed by television inspection have been corrected to the complete satisfaction of the District. Prior to submittal to the District, the CCTV videos-shall be reviewed by the Engineer, Applicant, and Contractor for any defect that may be visible. If CCTV videos and cut sheets are submitted to the District that are deemed "unacceptable," the Contractor shall be charged for the time taken by District personnel to review the CCTV videos. The minimum charge shall be one hundred dollars ($100).

5.5 Sewer Main Repairs

All proposed repairs must be approved by the District Inspector prior to actual repair. Once repair has been made, inspection will be required by a District Inspector. There will be no exception to this requirement. If a repair and/or correction is made in a sewer line segment, the entire line segment shall be required to be re-televised with water flowing. A line segment is defined as the entire length of sewer line from manhole to manhole.

5.6 Protection of Existing Sewer System

On the outlet of the connection point to the existing District sewer main, a mechanical plug shall be installed to prevent any flow, debris and or material from the newly constructed main line from entering the District's system. The plug shall be normally set on the downstream outlet of the manhole. Plugs shall be installed per the direction of

the District's Inspector. The plug shall be a mechanical-type device and is to be secured to the existing manhole to prevent loss of plug. The plug shall not be removed until Construction Acceptance has occurred.

The Contractor shall be required to make routine inspections of the mechanical plug to insure that no leaking is occurring. If a leak is found, the Contractor shall immediately notify the District and take corrective action.

The District may perform a video inspection of existing sewer mains that could potentially be impacted by construction activities prior to the start of construction and after the completion of construction. Any damage to existing facilities caused by the Contractor shall be repaired at the Contractor’s expense.

5.7 Manhole Abandonment

Manholes to be abandoned in place shall have all pipes entering or exiting the structure plugged with lean concrete or controlled low strength material backfill (Flo-Fill). For manholes with existing pipes too large to plug with fill, a bulkhead shall be constructed on the inside of the manhole to prevent the fill from entering the pipes.

Manhole tops or cone section shall be removed to the top of the full barrel diameter section or to a point not less than eighteen (18) inches below final grade. The structure shall then be backfilled with lean concrete or Flo-Fill. Surface restoration shall be completed to match the surrounding areas.

SECTION VI – STANDARD FORMS AND DETAILS

Form D1: Pre-Construction Meeting Checklist for Sewer Main Installation

Form D2: Sewer System Acceptance Procedure

Form D3: Sewer Pipe Cleaning and Televising Cut Sheet

Form D4: Bill of Sale – Sewer Main

Form D5: Sewer Easement

Form D6: Lender's Consent

D-01: Standard Manhole

D-02: Drop Manhole

D-03: Bar Screen Manhole

D-04: Anchor Manhole

D-05: Casing Detail

D-06: Sewer Maintenance Access

D-07: Groundwater Barrier

D-08: Arm Design Turnaround

D-09: Easement Width Detail

D-10: Sewer Pipe Insulation Detail

D-11: Water and Sanitary Sewer Separation

D-12: Dead End Manhole

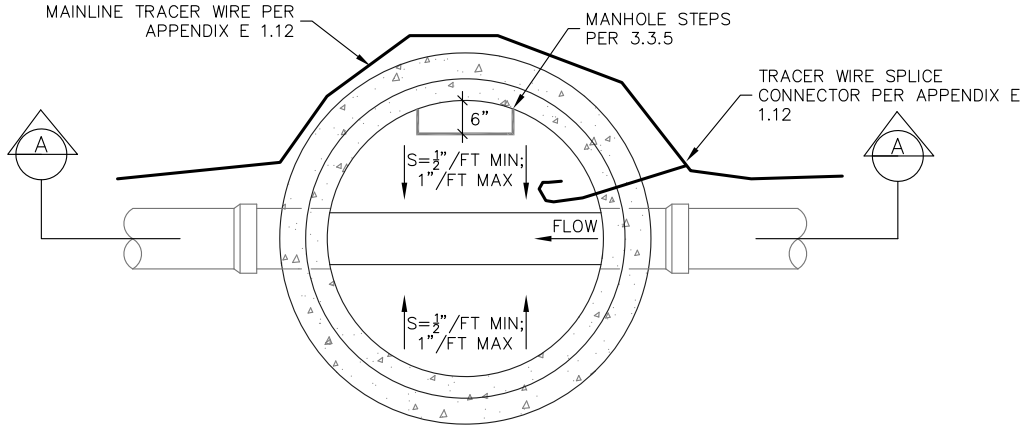

PLAN

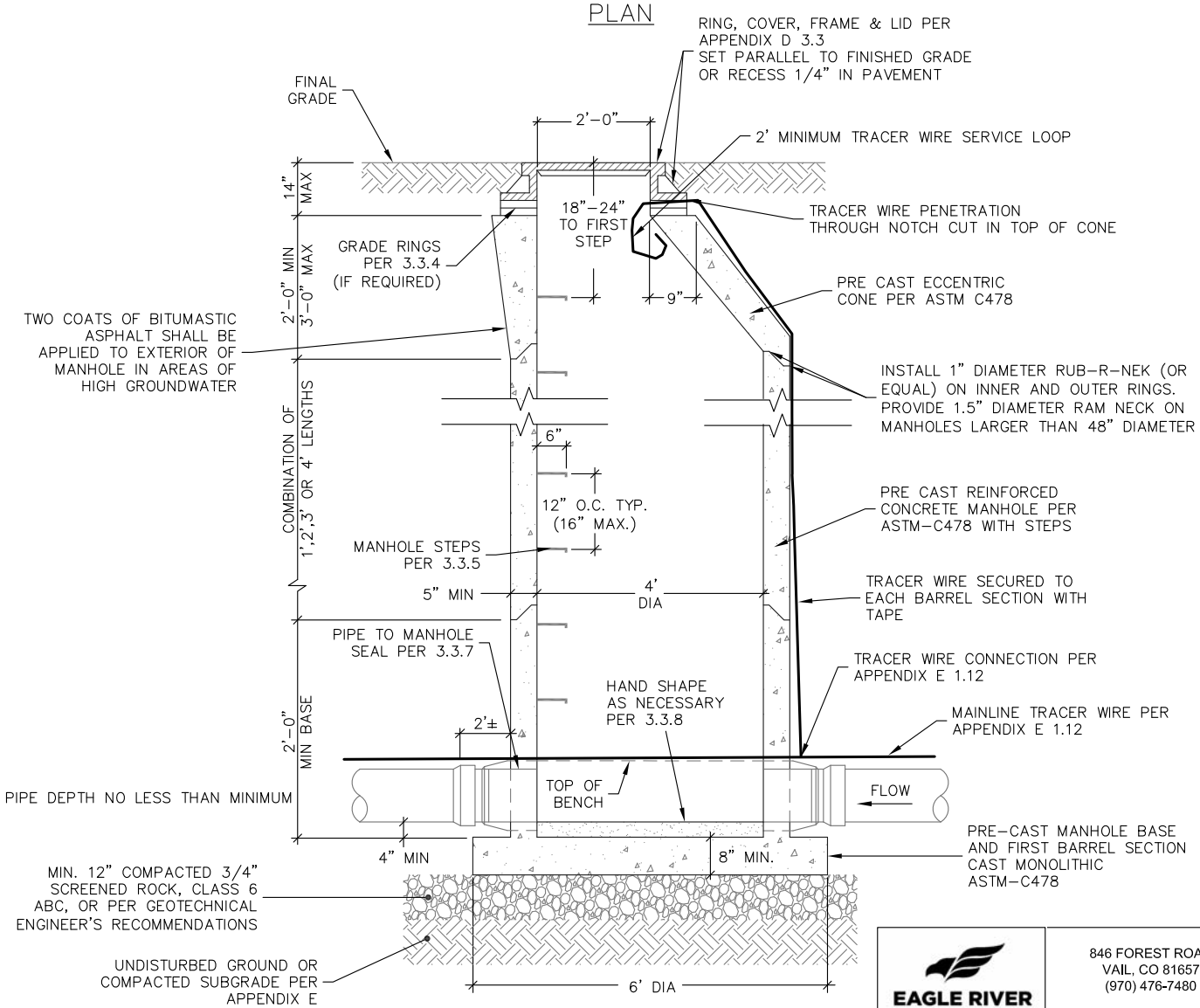

SECTION A

GENERAL NOTES

1. ALL CONCRETE WORK SHALL COMPLY WITH LATEST ACI-318 SPECIFICATIONS.
2. MANHOLE TROUGH SHALL HAVE A MINIMUM OF 0.2' DROP FROM ENTRANCE THROUGH EXIT.
3. FLOW CHANNEL TO BE SHAPED AS TO NOT ALLOW STANDING WATER PER 3.3.8.
4. MANHOLE SHALL CONFORM TO ASTM C478 AND ALL APPLICABLE DISTRICT STANDARDS (APPENDIX D).

EAGLE RIVER WATER & SANITATION DISTRICT
846 FOREST ROAD
VAIL, CO 81657
(970) 476-7480
WWW.ERWSD.ORG

STANDARD MANHOLE

DRAWN BY:	JEC	DATE:	03/01/2017
SCALE:	NONE	REV:	1/21/2020

D-01

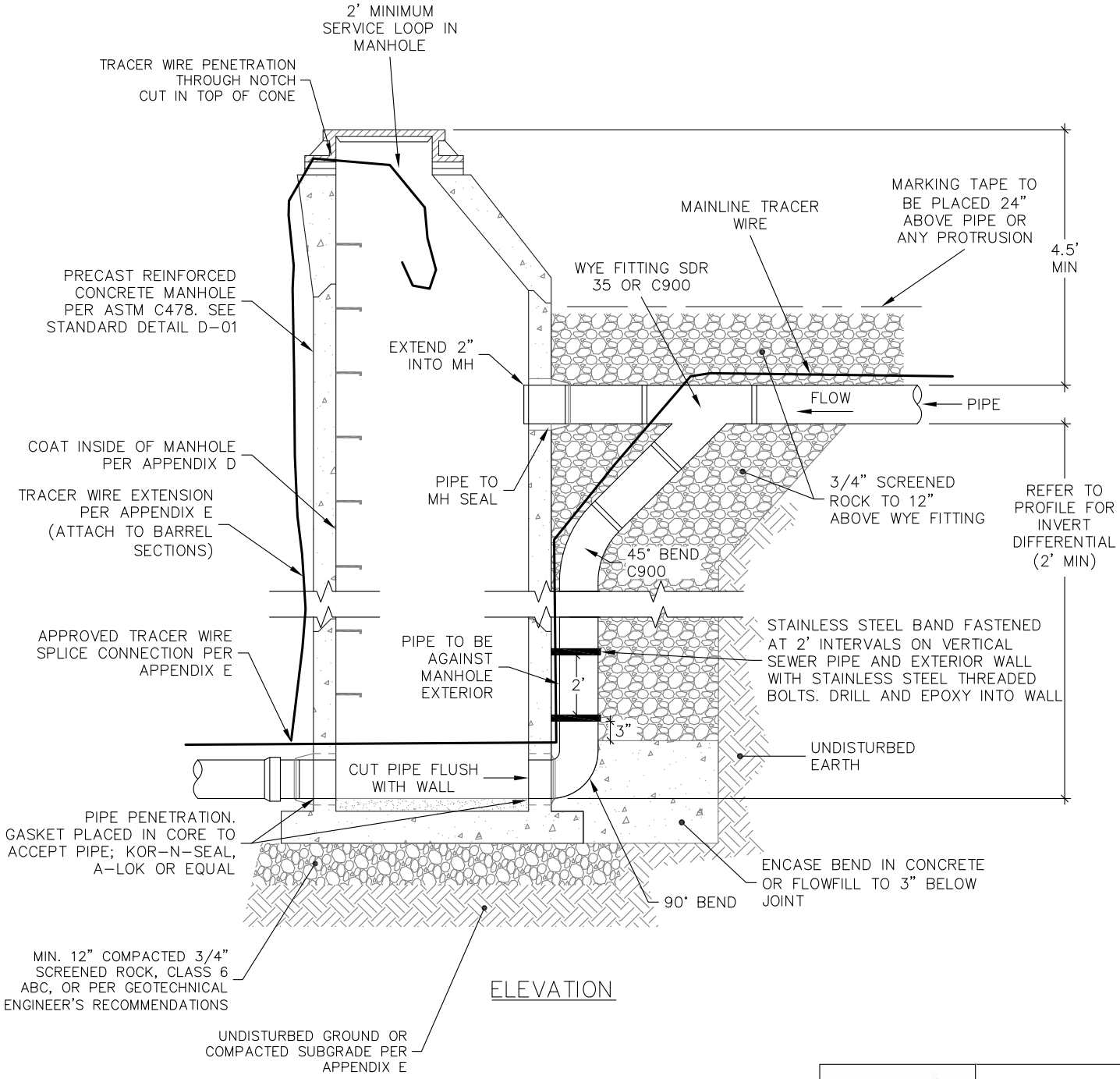

GENERAL NOTES

1. SEE 2.4.12 AND 3.3.11.
2. MANHOLE SHALL CONFORM TO D-01 STANDARD MANHOLE DETAIL AND ALL APPLICABLE DISTRICT STANDARDS.
3. ALL CONCRETE WORK SHALL COMPLY WITH LATEST ACI-318 SPECIFICATIONS.
4. MANHOLE TROUGH SHALL HAVE A MINIMUM OF 0.20' DROP FROM ENTRANCE THROUGH EXIT.

EAGLE RIVER WATER & SANITATION DISTRICT
846 FOREST ROAD
VAIL, CO 81657
(970) 476-7480
WWW.ERWSD.ORG

DROP MANHOLE CONNECTION

DRAWN BY:	JEC	DATE:	03/01/2017
SCALE:	NONE	REV:	1/21/2020

D-02

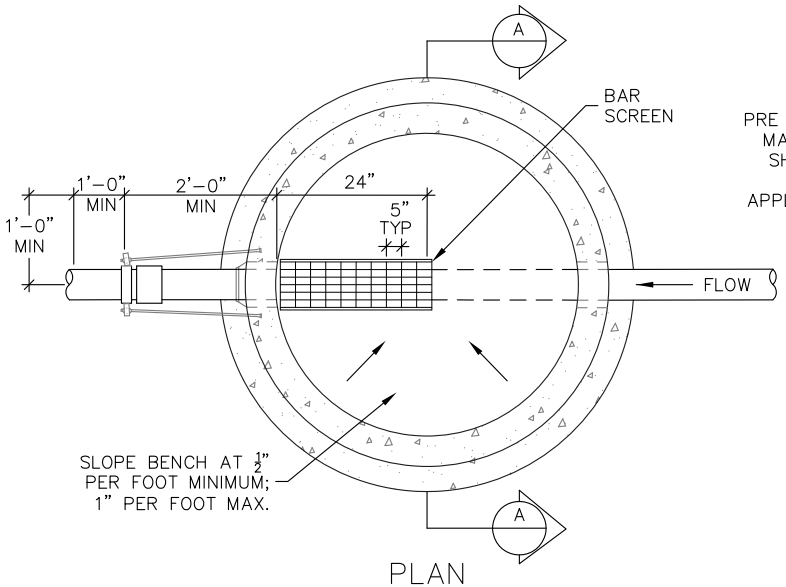

PLAN

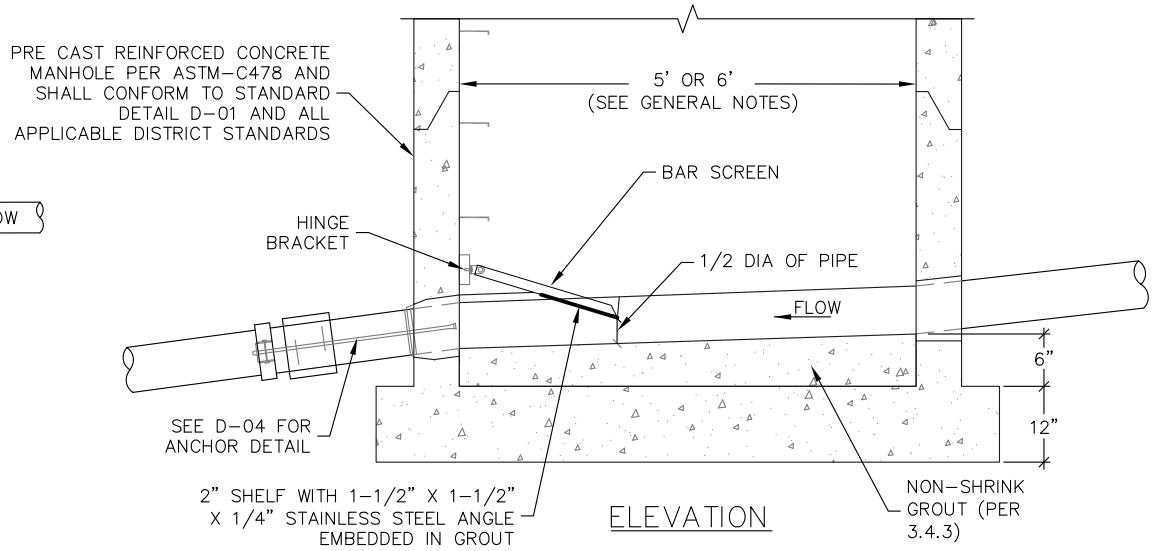

ELEVATION

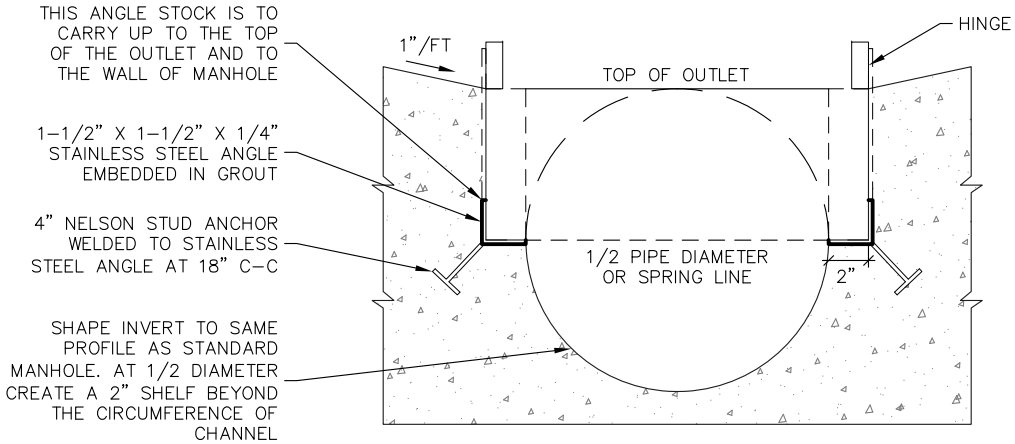

SECTION A

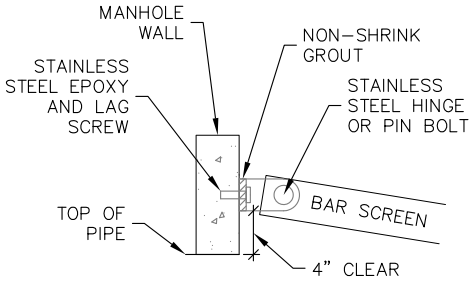

HINGE BRACKET

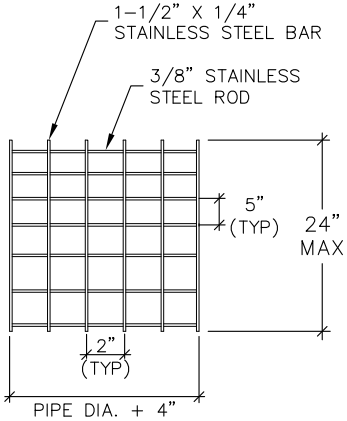

BAR SCREEN

BAR SCREEN TO BE 24" LONG AND THE WIDTH IS TO BE DIAMETER OF PIPE + 4". 1-1/2" X 1/4" STOCK SHALL FORM THE LONG AXIS OF THE SCREEN AND 3/8" ROD SHALL FORM THE BARS

GENERAL NOTES

1. 5' DIAMETER MANHOLES SHALL BE ALLOWED FOR STRAIGHT THROUGH BAR SCREENS. SLOPE TO BE 0.25' MIN.
2. 6' MANHOLES SHALL BE REQUIRED FOR 3-WAY AND/OR CHANGES OF DIRECTION. SLOPE TO BE 0.30' MIN.
3. BAR SCREEN CHANNEL AND BENCH TO BE HAND SHAPED AND GRADED BY CONTRACTOR PER 3.3.8 AND 3.3.9. APPENDIX D.
4. ALL HARDWARE FOR BAR SCREEN SHALL BE 316 STAINLESS STEEL.
5. ALLOW CLEARANCE FOR BAR SCREEN TO SWING UP FOR CLEANING.
6. CONCRETE BENCH FROM INLET TO OUTLET TO BE EQUAL TO PIPE DIAMETER. FORM A BENCH TO SLOPE UP AT 5% TO WALLS OF MANHOLE AS REQUIRED FOR A STANDARD MANHOLE.
7. FORM A 2" SUB-BENCH ON EITHER SIDE OF CHANNEL AND FOLLOW SAME SLOPE AS BAR SCREEN. EMBED 1-1/2" X 1-1/2" X 1/4" ANGLES ALONG THIS BENCH FOR REST.

EAGLE RIVER WATER & SANITATION DISTRICT
846 FOREST ROAD
VAIL, CO 81657
(970) 476-7480
WWW.ERWSD.ORG

BAR SCREEN MANHOLE AND DETAILS	
DRAWN BY: JEC	DATE: 03/01/2017
SCALE: NONE	REV: N/A
D-03	

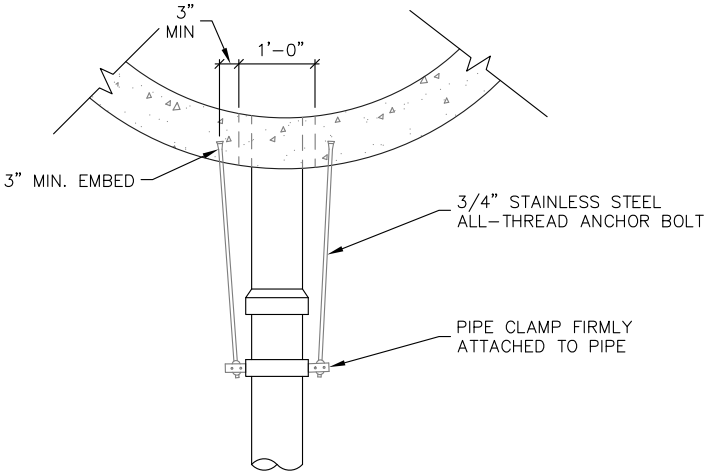

TOP VIEW

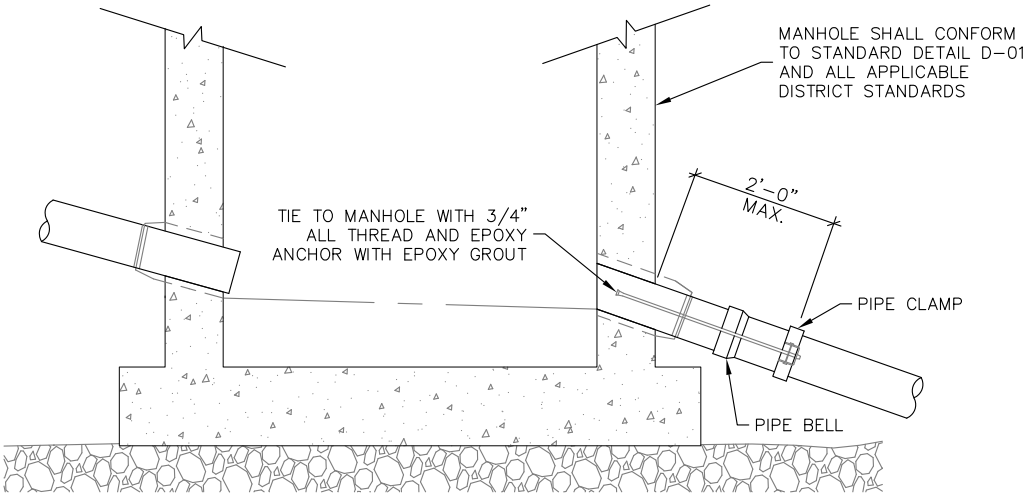

ELEVATION

GENERAL NOTES

1. ANCHOR MANHOLES ARE REQUIRED WHERE PIPE SLOPE EXCEEDS 20% EXITING THE MANHOLE ONLY. PER APPENDIX D.

2. SEWER MAINS ON 20 PERCENT SLOPES OR GREATER SHALL BE ANCHORED SECURELY WITH CONCRETE ANCHORS SPACED AS FOLLOWS:

   a. NOT OVER 36 FEET CENTER TO CENTER ON GRADES 20 PERCENT AND UP TO 35 PERCENT

   b. NOT OVER 24 FEET CENTER TO CENTER ON GRADES 35 PERCENT AND UP TO 50 PERCENT

   c. NOT OVER 16 FEET CENTER TO CENTER ON GRADES 50 PERCENT AND OVER.

EAGLE RIVER WATER & SANITATION DISTRICT
846 FOREST ROAD
VAIL, CO 81657
(970) 476-7480
WWW.ERWSD.ORG

ANCHOR MANHOLE

DRAWN BY:	JEC	DATE:	03/01/2017
SCALE:	NONE	REV:	N/A

D-04

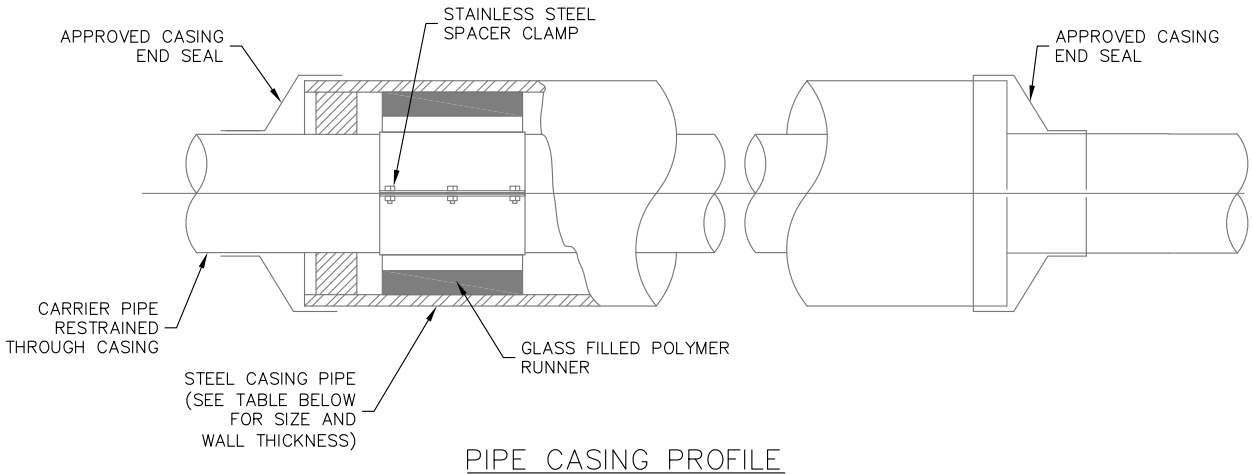

PIPE CASING PROFILE

CASING MATERIAL, SEALS AND SPACERS PER 3.7 APPENDIX D

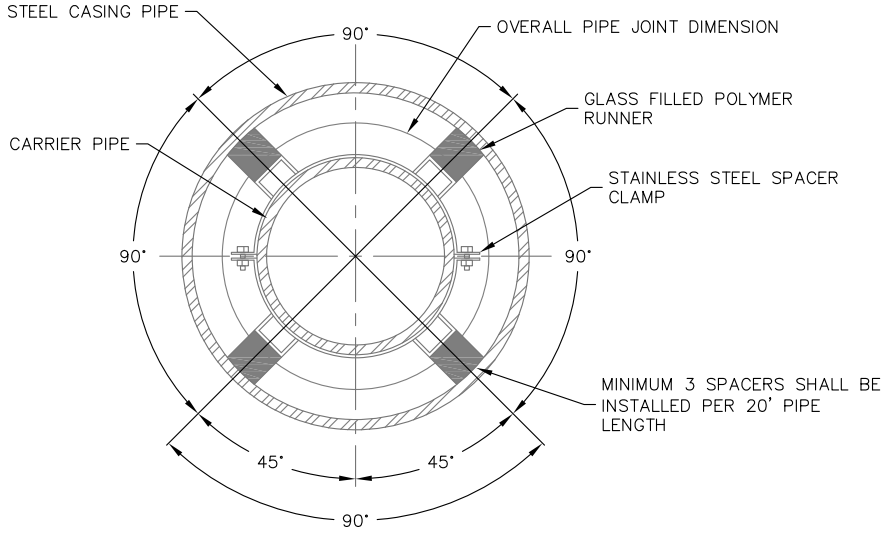

PIPE CASING CROSS SECTION

GENERAL NOTES

1. FOLLOW MANUFACTURER'S RECOMMENDATION, IF IN CONFLICT WITH ERWSD STANDARDS, USE MORE RESTRICTIVE SPECIFICATION.
2. CARRIER PIPE SHALL BE CENTERED AND ALL JOINTS RESTRAINED IN & THROUGH THE CASING PIPE.
3. SEWER MAINS SHALL BE ENCASED SEPARATELY FROM OTHER UTILITIES.
4. ALL FASTENERS SHALL BE T-304 STAINLESS STEEL.
5. MAXIMUM DISTANCE BETWEEN SPACERS SHALL BE 6 FEET ON CENTER.

CARRIER PIPE NOMINAL ø	CASING PIPE	
	MIN OD	MIN WALL THICKNESS
4"	12"	0.25"
6"	16"	0.3125"
8"	18"	0.3125"
12"	22"	0.375"
16"	28"	0.500"
20"	32"	0.500"

EAGLE RIVER WATER & SANITATION DISTRICT
846 FOREST ROAD
VAIL, CO 81657
(970) 476-7480
WWW.ERWSD.ORG

SEWER MAIN CASING DETAIL

DRAWN BY:	JEC	DATE:	03/01/2017
SCALE:	NONE	REV:	N/A

D-05

CONSTRUCT HAMMERHEAD OR 90° SIDEARM TURNAROUND AT THE END OF ALL DEAD END SEWER LINES. SEE STANDARD DETAIL D–08

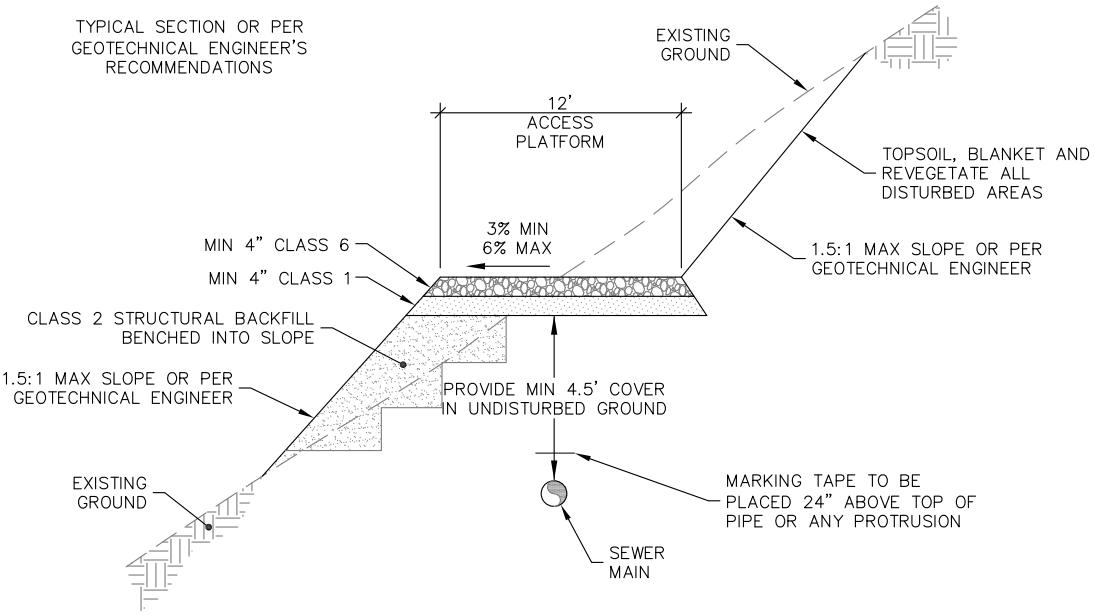

SECTION

GENERAL NOTES

1. THE CONTRACTOR SHALL GRADE ALL OFF ROAD SEWER LINE TRENCHES TO PROVIDE ACCESS PLATFORM.
2. ACCESS PLATFORMS SHALL BE GRADED TO MATCH ROAD GRADES TO PROVIDE VEHICULAR ACCESS AT ALL ROAD AND PLATFORM ACCESS INTERSECTIONS. MAXIMUM GRADE FOR BACK LOT ACCESS SHALL BE 10%.
3. ALL EARTHWORK SHALL BE IN CONFORMANCE WITH APPENDIX E.
4. TOPSOIL, BLANKET AND REVEGETATE ALL DISTURBED AREAS.

EAGLE RIVER WATER & SANITATION DISTRICT

846 FOREST ROAD
VAIL, CO 81657
(970) 476-7480

WWW.ERWSD.ORG

BACKLOT SEWER MAINTENANCE ACCESS

DRAWN BY:	JEC	DATE:	03/01/2017
SCALE:	NONE	REV:	N/A

D–06

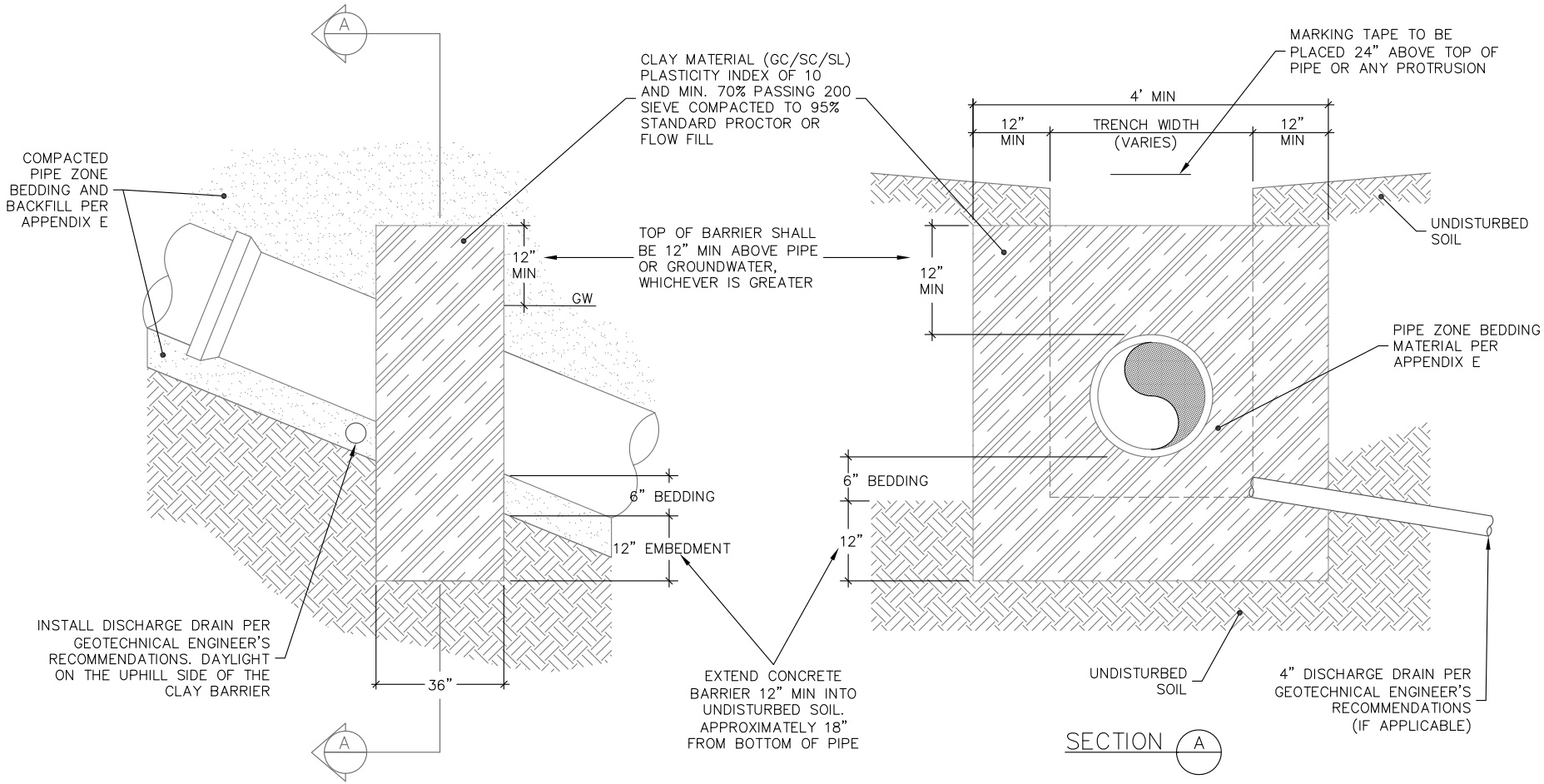

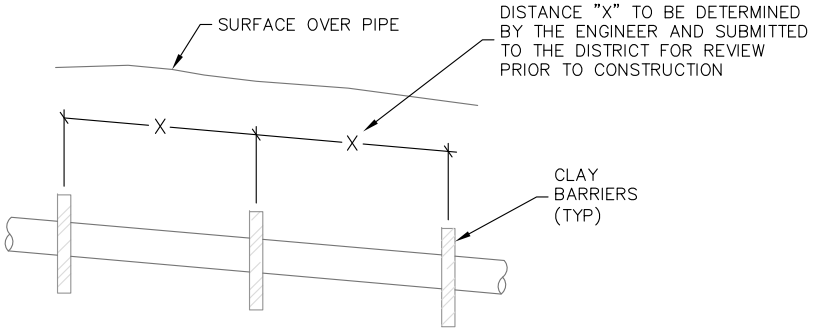

ELEVATION

EAGLE RIVER WATER & SANITATION DISTRICT	GROUNDWATER BARRIER		
	DRAWN BY: JEC	DATE: 03/01/2017	
846 FOREST ROAD VAIL, CO 81657 (970) 476-7480 WWW.ERWSD.ORG	SCALE: NONE	REV: N/A	
	D–07		

BACK LOT EASEMENT TURNAROUND
SIDE 90° ARM DESIGN

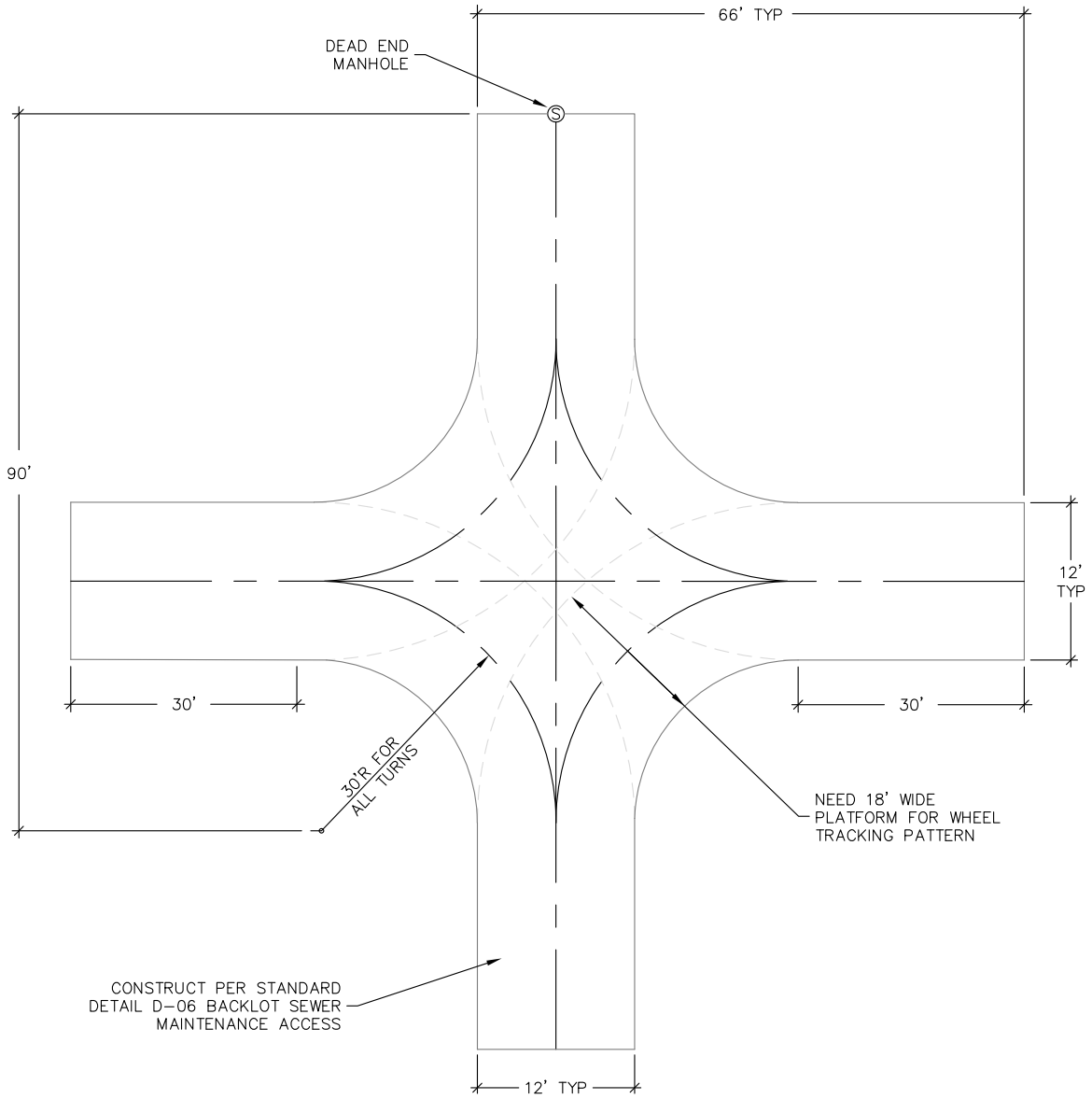

GENERAL NOTES

1. DIMENSIONS INDICATE REQUIRED USEABLE PLATFORM AND DO NOT INCLUDE CUT OR FILL SLOPES.
2. 90° ARM CAN BE EITHER RIGHT OR LEFT SIDE.
3. TURN AROUNDS MAY BE INSTALLED AS TERRAIN DICTATES AND AS APPROVED BY THE DISTRICT.
4. BACK LOT MAINTENANCE ACCESS & TURNAROUNDS MUST BE ENTIRELY LOCATED WITHIN DEDICATED EASEMENTS.

EAGLE RIVER WATER & SANITATION DISTRICT

846 FOREST ROAD
VAIL, CO 81657
(970) 476-7480

WWW.ERWSD.ORG

SIDE 90° ARM DESIGN TURNAROUND

DRAWN BY:	JEC	DATE:	03/01/2017
SCALE:	NONE	REV:	N/A

D-08

SEWER PIPE COVER DEPTH	MINIMUM EASEMENT WIDTH REQUIRED
4'6" TO 8'6"	20'
8'7" TO 11'0"	25'
11'1" TO 13'6"	30'
13'7" TO 16'0"	35'
16'1" TO 18'6"	40'
18'7" TO 21'0"	45'
21'1" TO 23'6"	50'

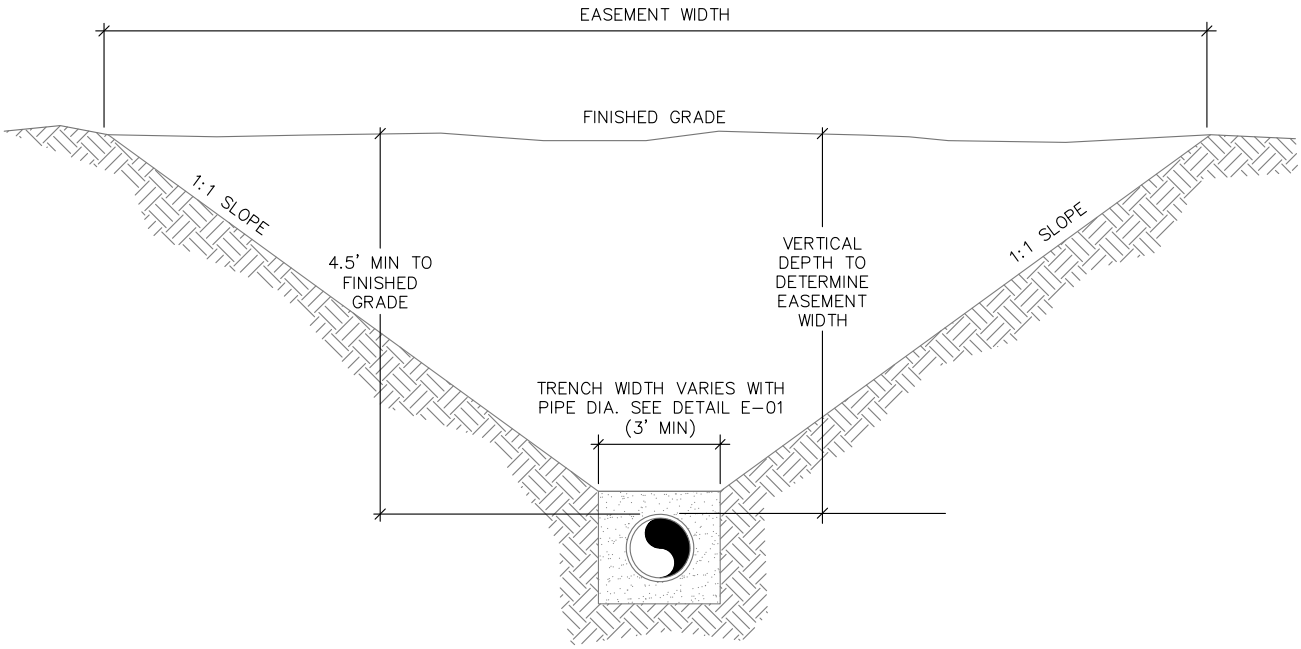

MINIMUM EASEMENT WIDTH

GENERAL NOTES

1. PIPE SHALL BE CENTERED IN EASEMENT.
2. ANY PROPOSED SEWER MAIN DEPTH GREATER THAN 14' DEEP REQUIRES AN ALTERNATIVES ANALYSIS AND DISTRICT APPROVAL.
3. CALCULATE EASEMENT WIDTH AS FOLLOWS:
   W = DEPTH TO TOP OF PIPE X 2 + 3 FEET
   (ROUNDED UP IN 5 FOOT INCREMENTS)

EXAMPLE:
10 FOOT DEEP PIPE = 10 X 2 + 3 = 23 FEET
W = 25 FOOT WIDE EASEMENT ROUNDED

EAGLE RIVER WATER & SANITATION DISTRICT
846 FOREST ROAD
VAIL, CO 81657
(970) 476-7480
WWW.ERWSD.ORG

EASEMENT WIDTH DETAIL

DRAWN BY:	JEC	DATE:	03/01/2017
SCALE:	NONE	REV:	N/A

D-09

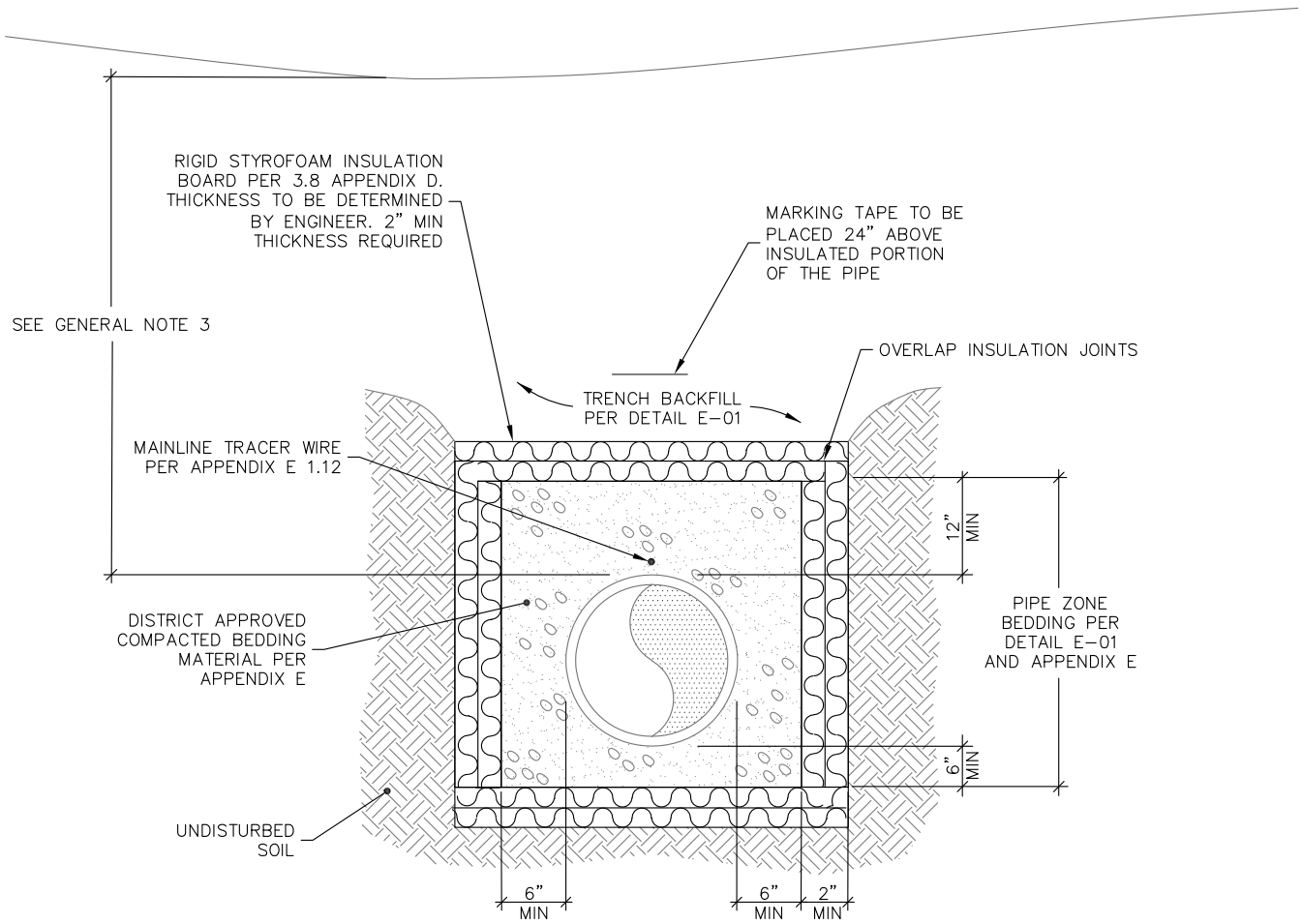

ELEVATION

GENERAL NOTES

1. CONDITION OF LESS THAN MINIMUM BURY DEPTH IS ALLOWED ONLY WITH WRITTEN APPROVAL FROM THE DISTRICT PRIOR TO CONSTRUCTION. INSULATION SHALL BE INSTALLED ON ALL PIPE THAT DOES NOT MEET MINIMUM BURY REQUIREMENTS.

2. THE USE OF INSULATION MUST BE APPROVED BY THE DISTRICT PRIOR TO INSTALLATION.

3. INSULATION SHALL BE INSTALLED ON ALL PIPES THAT DO NOT HAVE A MINIMUM OF 4.5' OF EFFECTIVE COVER. EFFECTIVE COVER SHALL BE DEFINED AS SEPARATION FROM COLD AIR SOURCES, INCLUDING STORM SEWERS. 1" OF INSULATION BOARD MAY BE SUBSTITUTED FOR EACH 1' OF SOIL COVER (MINIMUM 2" OF INSULATION) REQUIRED TO MEET THE MINIMUM COVER REQUIREMENT.

4. INSULATION SHALL BE DOW HIGHLOAD 100, OWENS CORNING FOAMULAR 1000, OR APPROVED EQUAL. HIGH COMPRESSIVE STRENGTH FOAM BOARD INSULATION IS REQUIRED WITHIN ALL RIGHT OF WAY AND PAVED AREAS.

EAGLE RIVER WATER & SANITATION DISTRICT
846 FOREST ROAD
VAIL, CO 81657
(970) 476-7480
WWW.ERWSD.ORG

SEWER PIPE INSULATION DETAIL

DRAWN BY:	JEC	DATE:	03/01/2017
SCALE:	NONE	REV:	1/21/2020

D-10

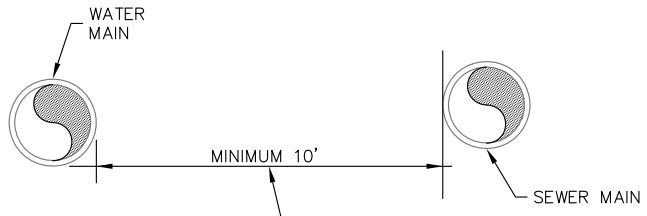

WATER MAINS MUST BE LAID AT LEAST 10 FEET HORIZONTALLY FROM ANY EXISTING OR PROPOSED GRAVITY SANITARY OR STORM SEWER, SEPTIC TANK, OR SUBSOIL TREATMENT SYSTEM. THE DISTANCE MUST BE MEASURED EDGE TO EDGE,

REQUIRED SEPARATION FOR PARALLEL INSTALLATIONS

WATER MAINS CROSSING SEWERS MUST BE LAID TO PROVIDE A MINIMUM VERTICAL DISTANCE OF 18 INCHES BETWEEN THE OUTSIDE OF THE WATER MAIN AND THE OUTSIDE OF THE SEWER. THIS MUST BE THE CASE WHERE THE WATER MAIN IS EITHER ABOVE OR BELOW THE SEWER WITH PREFERENCE TO THE WATER MAIN LOCATED ABOVE THE SEWER.

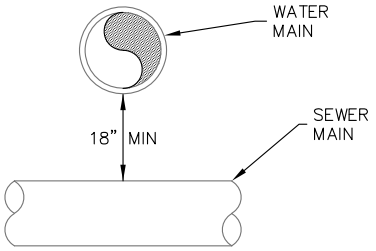

REQUIRED SEPARATION FOR PERPENDICULAR INSTALLATIONS

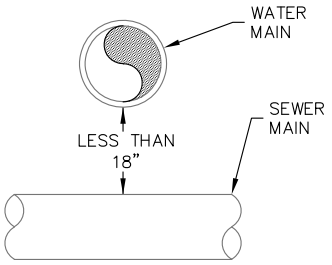

INSTALL SECONDARY CONTAINMENT ON EITHER THE WATER OR SEWER MAIN. PIPE CASING EXTENDING NO LESS THAN 9-FEET EACH SIDE OF THE CROSSING OR CONCRETE/CONTROLLED LOW STRENGTH MATERIAL (EX. FLOWABLE FILL) ENCASEMENT EXTENDING NO LESS THAN 10-FEET EACH SIDE OF THE CROSSING MAY BE USED. SEE GENERAL NOTE 3.

EXCEPTION A- SEWER UNDER WATER- REQUIRED SEPARATION FOR PERPENDICULAR INSTALLATION CANNOT BE ACHIEVED

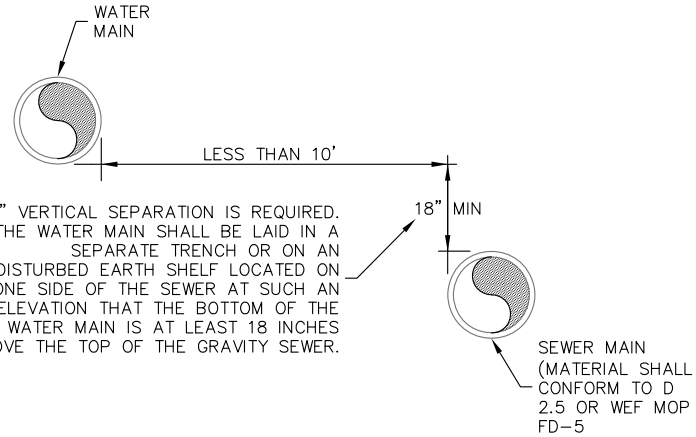

18" VERTICAL SEPARATION IS REQUIRED. THE WATER MAIN SHALL BE LAID IN A SEPARATE TRENCH OR ON AN UNDISTURBED EARTH SHELF LOCATED ON ONE SIDE OF THE SEWER AT SUCH AN ELEVATION THAT THE BOTTOM OF THE WATER MAIN IS AT LEAST 18 INCHES ABOVE THE TOP OF THE GRAVITY SEWER.

EXCEPTION-REQUIRED SEPARATION FOR PARALLEL INSTALLATION CAN NOT BE ACHIEVED

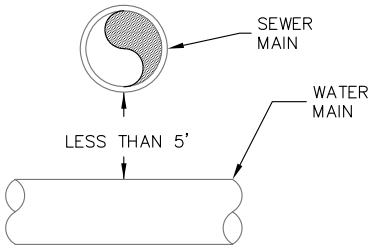

INSTALL SECONDARY CONTAINMENT ON EITHER THE WATER OR SEWER MAIN. PIPE CASING EXTENDING NO LESS THAN 9-FEET EACH SIDE OF THE CROSSING OR CONCRETE/CONTROLLED LOW STRENGTH MATERIAL (EX. FLOWABLE FILL) ENCASEMENT EXTENDING NO LESS THAN 10-FEET EACH SIDE OF THE CROSSING MAY BE USED. SEE GENERAL NOTE 4.

EXCEPTION B- SEWER OVER WATER- REQUIRED SEPARATION FOR PERPENDICULAR INSTALLATION CANNOT BE ACHIEVED

GENERAL NOTES

1. WATER PIPES MUST NOT PASS THROUGH OR COME IN CONTACT WITH ANY PART OF A SEWER MANHOLE. WATER MAIN SHOULD BE LOCATED AT LEAST 10 FEET FROM SEWER MANHOLES.

2. PIPE SEPARATION MUST COMPLY WITH STATE OF COLORADO DESIGN CRITERIA FOR POTABLE WATER SYSTEMS, SECTION 8.8 (ALL DETAILS REGARDING SEPARATION BETWEEN WATER AND SEWER).

3. SECONDARY CONTAINMENT-THE PIPE CASING MUST BE OF WATERTIGHT MATERIAL WITH NO JOINTS. THE CASING PIPE MATERIALS MAY BE STEEL, DUCTILE IRON, FIBERGLASS, FIBERGLASS REINFORCED POLYMER MORTAR (FRPM), OR POLYVINYLCHLORIDE (PVC) WITH SUITABLE CARRIER PIPE SUPPORTS AND CASING PIPE END SEALS.

4. SECONDARY CONTAINMENT REQUIRED UNLESS THE VERTICAL DISTANCE EXCEEDS 5 FEET. THE CASING MUST BE A SINGLE SECTION OF STEEL OR DUCTILE IRON PIPE. THE DESIGN MUST INCLUDE A MEANS TO SUPPORT THE INTERCEPTOR OR SEWER MAIN TO PREVENT SETTLEMENT AND PERMIT MAINTENANCE OF THE WATER MAIN WITHOUT DAMAGE TO THE SEWER PIPE. CROSSINGS INVOLVING JOINTLESS PIPE SUCH AS HDPE, FUSIBLE PVC OR WELDED STEEL DO NOT REQUIRE INSTALLATION OF SECONDARY CONTAINMENT.

EAGLE RIVER WATER & SANITATION DISTRICT
846 FOREST ROAD
VAIL, CO 81657
(970) 476-7480
WWW.ERWSD.ORG

WATER & SANITARY SEWER SEPARATION

DRAWN BY:	JEC	DATE:	03/01/2017
SCALE:	NONE	REV:	N/A

D-11

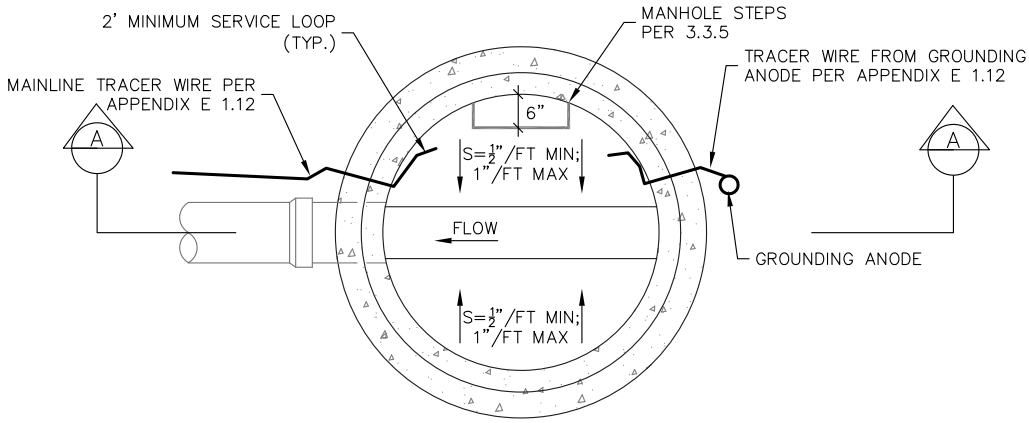

PLAN

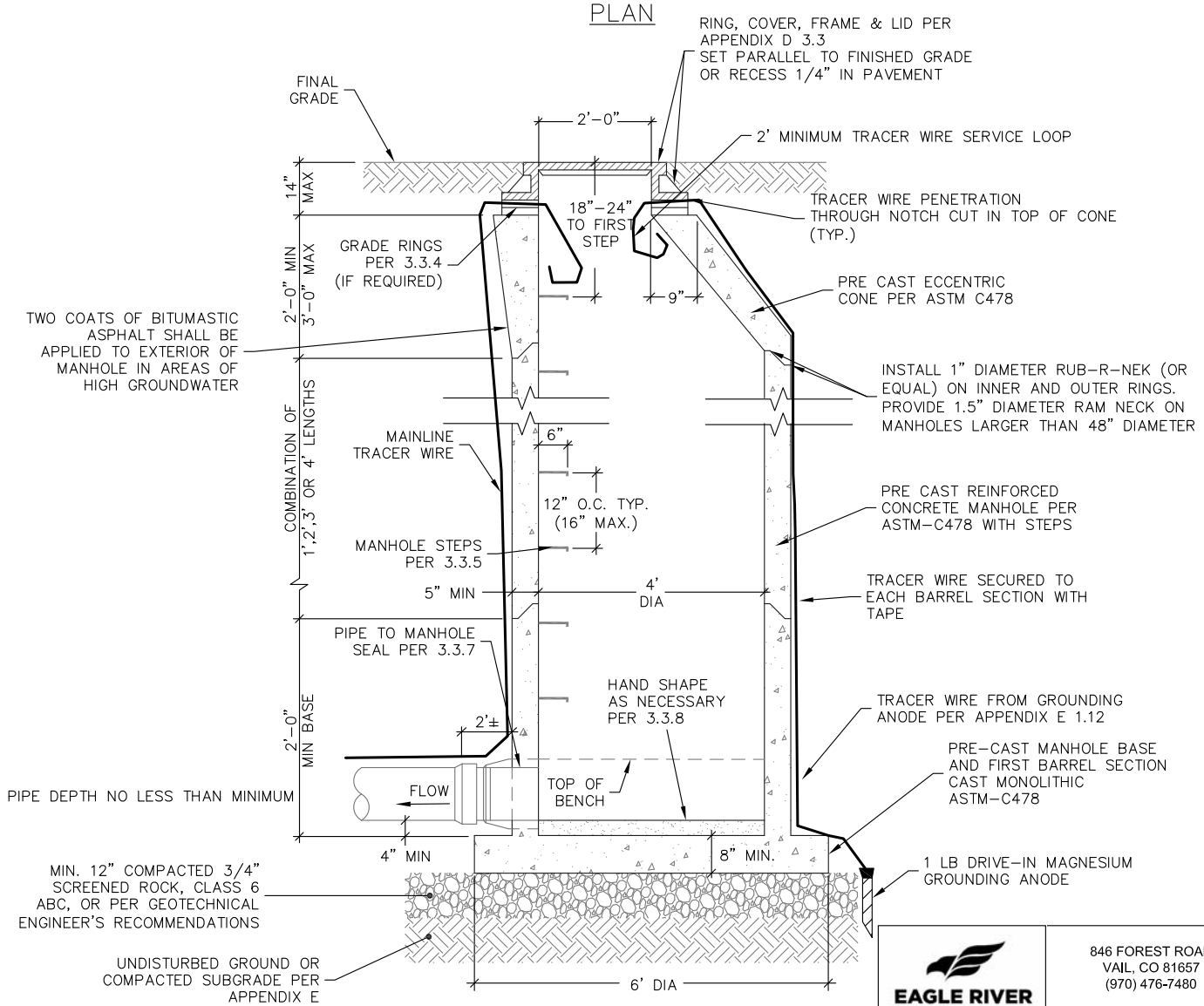

SECTION A

GENERAL NOTES

1. ALL CONCRETE WORK SHALL COMPLY WITH LATEST ACI-318 SPECIFICATIONS.
2. TRACER WIRE SHOWN ENTERING OPPOSITE SIDES FOR CLARITY, WIRES MAY BE INSTALLED PARALLEL THROUGH SAME NOTCH IN PRECAST CONE SECTION.
3. FLOW CHANNEL TO BE SHAPED AS TO NOT ALLOW STANDING WATER PER 3.3.8.
4. MANHOLE SHALL CONFORM TO ASTM C478 AND ALL APPLICABLE DISTRICT STANDARDS (APPENDIX D).

EAGLE RIVER WATER & SANITATION DISTRICT
846 FOREST ROAD
VAIL, CO 81657
(970) 476-7480
WWW.ERWSD.ORG

DEAD END MANHOLE

DRAWN BY:	JRS	DATE:	1/21/2020
SCALE:	NONE	REV:	2/12/2020

D-12

Form D1: **Pre-Construction Meeting Checklist for Sewer Main Installation**

Project:_____**Location:**_____

Date:_____**Wastewater Plant:**_____

Attendees:_____

☐ **1. Customer Notification**

☐ **2. All licenses and permits are secured for work.**

☐ **3. A bill of materials has been provided and reviewed.**

☐ **4. Site Safety**

- ✓ OSHA safety standards and practices apply.

☐ **5. Survey**

- ✓ Survey layout is complete and surveyor retained for as-built locations.

☐ **6. Temporary Plugs**

- ✓ A mechanical pipe plug must be installed where new mains are connected to existing mains. This plug will remain until the district inspector approves removal

☐ **7. Installation of Pipe**

- ✓ Factory applied end caps will remain on the pipe until connection is made
- ✓ Check all pipes for warping. Any pipe considered to be warped will be rejected.
- ✓ No “low” areas, pipe defects, dents, cracks or wide joints will be allowed.
- ✓ All mains and services in proximity to potable water infrastructure will meet district regulations pertaining to separation of services.

☐ **8. Minimum Depth of Bury and Bedding**

- ✓ Four-feet six inches (4’-6”)
- ✓ In cases where minimum bury depth cannot be achieved, one inch (1”) of approved insulation will be required per foot of missing cover, minimum 2 inches.
- ✓ Six inches (6”) of approved bedding material under the pipe and twelve inches (12”) over the top of pipe.

☐ 9. Cutting of Pipe

- ✓ All cuts will be straight, true and beveled. All burrs will be removed from the ends of cut pipe and the ends lightly rasped or filed.

☐ 8. Tracer Wire and Joint Bonding

- ✓ Tracer wire *#12 AWG 0.1019" diameter copper conductor or copper clad steel insulated with a 30 mil, high-density, high molecular weight polyethylene (HDPE) insulation, green in color, and rated for direct burial use at 30 volts. Tracer wire will be installed on all sewer mains and service lines.
- ✓ The Applicant shall submit plans for a complete tracer wire system..
- ✓ All new mainline trace wire installations shall be located by the applicant using typical low frequency (512Hz) line tracing equipment, witnessed by the inspector, contractor, engineer and facility owner as applicable, prior to acceptance of ownership.
- ✓ Tracer wire grounding anode at all dead ends
- ✓ Tracer wire splicing/connections shall include two- and 3-way lockable connectors or a three way lug connector specifically manufactured for use in underground trace wire installation
- ✓ A No. 4 conductor and cad-welds or continuity straps will be used to bond each joint and fitting.

☐ 10. Manholes

- ✓ All manhole sections to be pre-cast except for tie-ins to existing segments.
- ✓ All manhole sections must be centered and have Rub-R-Neck gaskets on both inner and outer rings.
- ✓ All manhole inverts must be grouted to meet pipe (no standing water), all benches and flow channels must be formed and clean.

☐ 11. Marking Tape and Locating Disk

- ✓ Marking tape will be placed twenty-four inches (24") above the pipe for all main and service lines. Marking tape shall be solid green color with black lettering six inches (6") wide and of five (5)-mil thick PVC material.

☐ 12. Testing

- ✓ All mains will be air tested.
- ✓ High groundwater manholes will be vacuum tested.
- ✓ All mains will be cleaned and televised, original videos and cut sheets will be submitted to the District in the required format. All videos must be reviewed for deficiencies by the owner/contractor/engineer prior to submittal to the District. Additionally, all corrective action taken by the owner/contractor/engineer will be completed, inspected by the District, and re-televised prior to initial submittal to the District.

☐ 13. Stub Outs

- ✓ Stub outs will be only allowed to the edge of easement or the property line.

☐ 14. Design Changes

- ✓ Engineer must submit any design changes to Construction Review for approval prior to implementation. Minor field changes may be approved by the District inspector and captured in As-Built documentation.

☐ 15. Construction acceptance includes the following:

- ✓ Rough grade inspection
- ✓ Manhole inspection
- ✓ Air testing, cleaning, televising completed and approved.
- ✓ Drawings of record submitted and approved.
- ✓ Easement documentation.
- ✓ Project costs.
- ✓ Bill of sale.

☐ 16. Warranty Period

- ✓ Will not start until Drawings of Record, Recorded Easement Documents, Project Costs Documents and Bill of Sale are received and approved by the District

Reference: Two River Metro District Rules and Regulations Appendix D – Standard Specifications for Sewer Mains

Contractor:_____**Engineer:**_____

Owner:_____**Inspector:**_____

Form D2: SEWER SYSTEM ACCEPTANCE PROCEDURE

Location: _____

Project: _____ **Stations:** _

Engineer: _____ **Applicant:** _

Contractor: _____ **Excavator:** _

CONSTRUCTION REVIEW TEAM (CRT)

	Date	Approved By
Plans Approved for Construction:		

FIELD OPERATIONS INSPECTOR

Inspection/ Test Type	Date	Values	Sign Off
1) Sewer Assets Installed:			
2) Manhole(s):			
3) Main(s) Jetted/Cleaned:			
4) Main(s) Televised:			
5) Low PSI Air Test:			
2) Tracer Wire Testing			
6) Rough Grade:			
7) As-Built/ GIS Review:			
8) Final Grade and Paving:			

DEVELOPMENT REVIEW COORDINATOR

	Date	Sign Off
11) **Construction Acceptance**		

FIELD OPERATIONS INSPECTOR

	Date	Sign Off
12) 2-Year Warranty WO Created		
13) 2-Year Warranty Inspection		

DEVELOPMENT REVIEW COORDINATOR

14) **Final Acceptance**		

TWO RIVERS VILLAGE

Form D3: SEWER PIPE CLEANING & TELEVISING CUT SHEET

----ALL APPLICABLE INFORMATION MUST BE COMPLETED----

Project:_____Map Page: _____

Street: _____District/ City: _____

Owner:_____Contractor: _____

Date Flushed:_____Date Televised:_____Tape No.: _____

TV Company:_____TV Operator: _____

Pipe Type: _____Pipe Diameter:_____Pipe Slope: _____

Joint Length:_____Length of Run:_____Surface Cover: _____

Dist. Top of Cone to Rim: _____ MH Lid Diameter: _____ MH Condition: _____

Camera Travel:_____MH Infiltration: YES_____NO _____

With Flow:_____ GPM: _____

Against Flow: _____

Upstream MH #:_____Downstream MH #: _____

Is the Pipe Condition Adequate? _____

Will the pipe need to be repaired? _____

Does the Pipe need to be repaired ASAP? _____

----Contractor to fill out cut sheet on following page----

Distance to: (FT)	Service Size/ Type	Service Clock Position	Lot # Street #	Additional Remarks (Please indicate lengths of cracks, low areas, problem areas, etc.)

General Comments: _____

BILL OF SALE – SEWER MAIN

KNOW ALL MEN BY THESE PRESENTS, that _____ _____, ("Seller"), for and in consideration of the mutual promises and assurances made herein, the sufficiency of which is hereby acknowledged, and other valuable consideration to be paid by **Two River Metro District** ("District"), a quasi-municipal corporation of the State of Colorado has bargained and sold, and by these presents does grant and convey unto the District, its successors and assigns, the following property:

The sewer system, equipment, and related appurtenances and facilities, including all related personal property (the "Improvements"), which are constructed or otherwise acquired by Seller within the property generally known as _____ _____ _____, and described on Exhibit A, attached hereto and incorporated herein by reference.

To have and to hold the same, unto the District, its successors and assigns forever, and Seller, for itself, its successors and assigns, covenants and agrees to and with the District, its successors and assigns, to warrant and defend the sale of said Improvements, hereby made unto the District, its successors and assigns, against all and every person or persons whomsoever, and warrants that the conveyance of the Improvements to the District, its successors and assigns, is made free from any claim or demand whatsoever.

The Seller further agrees and assures:

1. That all of the Improvements described herein were installed in substantial compliance with the District's Rules and Regulations and applicable construction standards, and that said Improvements are in first-class working order, free from any defect whatever.

2. That no charges for materials or labor are due and payable on any of the Improvements described herein, and that Seller shall indemnify, defend, and hold the District and its agents, employees, engineers, and attorneys, harmless from and against all claims, damages, judgments, losses, and expenses of every nature, including reasonable attorney's fees, arising at any time out of any act or omission of Seller and its employees, subcontractors and their employees, and all other persons directly or indirectly involved or performing work for Seller on the Improvements described herein.

3. If within two (2) years after the date of **Construction Acceptance** of the Improvements by the District, any Work is found to be defective, Seller shall promptly, without cost to the District and in accordance with the District's written instructions, within seven (7) days after the District's issuance of written instructions correct the defective Work at Seller's cost. If Seller does not promptly comply with the terms of such instructions or in an emergency where delay would cause serious risk of loss or damage, the District may have the defective Work corrected or removed and replaced,

and all direct and indirect costs of such removal and replacement, including compensation for additional professional services, shall be paid by Seller. Seller shall also pay for any damage done to other work, other property or persons that occurred as a result of the defective Work within the **TWO-YEAR** warranty period.

4. Except for any notice required by law to be given in another manner, (a) any notice to Seller provided for in this Bill of Sale shall be in writing and shall be given and be effective upon (1) delivery to Seller or (2) mailing such notice by first class U.S. mail, addressed to Seller to Seller's address stated herein or at such other address as Seller may designate by notice to the District and (b) any notice to the District shall be in writing and shall be given and be effective upon (1) delivery to the District or (2) mailing such notice by first class U.S. mail, to the District's address stated herein or to such other address as the District may designate by notice.

IN WITNESS WHEREOF, the Seller has caused its name to be hereunto subscribed this _____day of_____, 20__.

SELLER:
By: _____

_____
(Title)

_____

_____
Mailing Address

STATE OF COLORADO)
) ss.
COUNTY OF EAGLE)

The foregoing instrument was acknowledged before me this _ day of_____, 20 , by _____
as_____of_____.

WITNESS my hand and official seal.

(S E A L)

_____
Notary Public

My commission expires:

_____

SEWER EASEMENT

THIS EASEMENT is made this_____day of_____, 20__, by and between_____(hereinafter referred to as "Grantor"), and it's successors and assigns, and the **Two Rivers Metro District**, a quasi-municipal corporation of the State of Colorado within the County of Eagle, (hereinafter referred to as "District").

WITNESSETH, that for and in consideration of the sum of One Dollar ($1.00) and other good and valuable consideration paid by the District to Grantor, the receipt of which is hereby acknowledged, the Grantor does hereby grant, convey and transfer unto the District, its successors and assigns, a perpetual easement and right to construct, install, remove, replace, add to, maintain, repair, operate, change or alter underground sewer lines and all underground and surface appurtenances related thereto such as lift stations and manholes (hereinafter "sewer lines"), together with any and all sewer lines situate therein, all necessary rights-of-way for convenient ingress and egress thereto and therefrom, and the right to occupy and use, from time to time, as much of the adjoining land of the Grantor as may be reasonably necessary for any of the aforesaid purposes, over, under and across the following described premises, situate in the County of Eagle, State of Colorado, to-wit:

See EXHIBIT A attached hereto and incorporated herein by reference.

Grantor warrants that the Grantor has the lawful right to grant and convey such easement, rights-of-way, and sewer lines. Further, Grantor warrants that the sewer lines are free and clear of all liens and encumbrances.

Grantor will at no time permit, place or construct any structure, building or improvement of any kind, temporary or permanent, on any part of the above-described premises. Any structure, building or improvement located on the above-described premises as of the date of this Easement, may be removed by the District without liability for damages arising therefrom.

Following the completion of the purpose of any entry by the District upon such easement for any of the aforesaid objects, the District shall restore the premises to substantially the same condition existing at the time of the entry thereon, except for shrubs, plants, sidewalks, driveways or parking areas thereon located or damaged thereby.

All provisions of the Easement, including all benefits and burdens, shall run with the land and shall be binding upon and inure to the benefit of the successors and assigns of the parties hereto, subject to the provisions hereof.

IN WITNESS WHEREOF, the parties hereto have set their hands and seal the day and year first above written.

GRANTOR:

_____
(Name of Grantor)

STATE OF COLORADO)
) ss.
COUNTY OF_____)

The foregoing Easement was subscribed and sworn to before me this _____ day of_____, 20__, by _____ _____.

WITNESS my hand and official seal.

(S E A L)

_____
Notary Public

My commission expires:

_____

ACCEPTED by the District this_____day of_____,20 .

By: General Manager

LENDER'S CONSENT

_____ Consents to the foregoing Easement and binds itself, its successors and assigns, the same as though its Deed of Trust, recorded on _____ _____, 20__, at Reception Number_____of the records of the Clerk and Recorder of_____County, Colorado, was made specifically subject to said Easement.

By:_____
Title:_____

STATE OF COLORADO)
) ss.
COUNTY OF_____)

The foregoing Easement was subscribed and sworn to before me this _____ day of_____, 20__, by _____ _____.

WITNESS my hand and official seal.

(S E A L)

Notary Public

My commission expires:

_____

RULES AND REGULATIONS
FOR
WATER AND WASTEWATER SERVICE

TWO RIVERS METROPOLITAN DISTRICT

APPENDIX E

EARTHWORK AND CONSTRUCTION SPECIFICATIONS

TABLE OF CONTENTS

SECTION I – GENERAL 3

1.1 General Requirements 3
1.2 Maintenance of Traffic and Closing of Streets 3
1.3 Barricades, Guards, and Safety Provisions 3
1.4 Subgrade and Road Preparation 3
1.5 Trenching Operations 4
1.5.1 Trench Width 4
1.5.2 Trench Support 4
1.5.3 Excavated Material 4
1.6 Excavation to Line and Grade 5
1.7 Caution in Excavation and Protection of Existing Facilities 5
1.8 Excavation in Poor Soil 5
1.9 Surplus Excavation Material 5
1.10 Blasting 6
1.11 Dewatering 6
1.12 Tracer Wire 7
1.12.1 Materials 7
1.12.2 Installation 8
1.12.3 Testing 11
1.13 Pipe Zone Bedding Material 11
1.14 Insulation Board 12
1.15 Pipe Zone Backfill and Compaction 13
1.16 Trench Backfill Material 13
1.17 Trench Backfill Compaction 14
1.18 Cleanup 15
1.19 Surface Restoration 15

SECTION II -DETAILS 17

E-01: MAIN TRENCH SECTION 17

SECTION I – GENERAL

1.1 General Requirements

The installation of pipe material and appurtenances shall be performed in accordance with the acceptable practices set forth by the American Society for Testing Materials (ASTM), the manufacturer's recommendations, these Specifications and approved plans.

1.2 Maintenance of Traffic and Closing of Streets

The Contractor shall carry on the work in a manner that will cause the least interruption in traffic. Adequate barricades, construction signs, safety flasher lights and flag persons as required shall be placed and maintained to protect persons from injury and until it is safe for traffic and pedestrians to use the roadway. All material piles, equipment and pipe that may serve as obstructions to traffic shall be enclosed by fences or barricades and shall be protected by proper lights when the visibility is poor.

All safety and traffic rules and regulations of local authorities shall be observed. All barricading, signage and detours shall be coordinated with the appropriate entity including Eagle County, Colorado Department of Transportation (CDOT), or Special Districts, and shall be in accordance with said regulations.

1.3 Barricades, Guards, and Safety Provisions

Open excavations, occurring as a part of this work, are to be barricaded and posted with warning lights. Protect structures, utilities, sidewalks, pavements, and other facilities from damage caused by settlement, lateral movement, undermining, washout, and other hazards created by earthwork operations. Protect trees and other features remaining as portion of final landscaping. Safety of workers shall be provided as required by the Occupational Safety and Health Act (OSHA).

Protect benchmarks, existing structures, fences, roads, sidewalks, and other features not designated for demolition. Contractor shall be responsible to repair any damage to those items not designated for demolition or removal in a manner satisfactory to the owner at no additional cost to the owner.

All barricading and detours shall be coordinated with the appropriate entity including any Special Districts, Eagle County, or Colorado Department of Transportation (CDOT), and shall be in accordance with said regulations.

1.4 Subgrade and Road Preparation

Prior to installation of mains in dedicated streets, road construction must have progressed to at least the subgrade stage. Subgrade elevation is defined as the surface

in the road paving section immediately below base course. The surface shall be smooth, clear of debris, and free from deep holes, ruts, and large rocks that may hinder main installation. Mains shall be laid where the ground surface is near its final elevation, whether located in a dedicated street or not.

1.5 Trenching Operations

The trench shall be excavated in a manner that will allow the pipe to be installed to the alignment and depth required. The trench shall be excavated only so far in advance of the pipe installation as is necessary to expedite the work.

1.5.1 Trench Width

All existing asphalt or concrete surfacing shall be saw cut vertically in a straight line, and removed from the job site prior to starting the trench excavation. This material shall not be used in any fill or backfill. If required by the local authority, concrete removal shall occur at the nearest control joint.

The trench shall be excavated so that a minimum clearance of six inches (6") shall be maintained on each side of the pipe for proper placement and compaction of the bedding or backfill material. Large rocks, boulders, and stones shall be removed to provide a clearance of at least six inches (6") below and on each side of all pipe, fire hydrants, valves, and fittings. The specified minimum clearances are the minimum clear distances that will be permitted between any part of the pipe and appurtenances being installed and any part, projection, or point of such rock, boulder, or stone.

1.5.2 Trench Support

The trench shall be adequately supported and the safety of workers provided for as required by the most recent standards adopted by the Occupational Safety and Health Administration (OSHA) Standards Board. Sheeting and shoring shall be utilized where required to prevent any excessive widening or sloughing of the trench, which may be detrimental to human safety, to the pipe, and appurtenances being installed, to existing utilities, to existing structures, or to any other existing facility or item.

1.5.3 Excavated Material

Excavated material shall not be placed closer than two feet (2') from the top edge of the trench. Heavy equipment should not be used, or placed near the sides of the trench unless the trench is adequately braced.

All excavated material shall be piled in a manner that will not endanger the work and that will avoid obstructing traffic. Hydrants, valve lid covers, valve boxes, or other utility controls shall be left unobstructed and accessible until the work is completed.

1.6 Excavation to Line and Grade

All excavations shall be made to the lines and grades as established by the approved drawings. The grade and alignment of the pipe being installed shall be controlled by means of laser beam or offset grade stakes, set in the field by a professional surveyor. Pipe trenches shall be excavated to the depth required to provide a uniform and continuous bearing and support for the pipe on solid undisturbed ground at every point between bell holes. Bell holes shall be provided at each pipe joint to permit the joint to be made properly. Any part of the bottom of the trench excavated below the specified grade shall be corrected with approved material and thoroughly compacted. The finished grade of the trench shall be prepared accurately by means of hand tools. The trench bottom should be smooth and free from stones greater than 1.5 inches in diameter, large dirt clods and any frozen material.

1.7 Caution in Excavation and Protection of Existing Facilities

The Contractor shall proceed with caution in the excavation and preparation of the trench so that the exact location of underground utilities and structures, both known and unknown, may be determined. Adequate protection, temporary support and maintenance of all underground and surface structures, utilities and other obstructions encountered in the progress of the work shall be furnished by the Contractor at his expense and under his direction. The Contractor shall be held responsible for the repair of such utilities and structures when broken or otherwise damaged because of negligence or carelessness on his/her part. Any structures, utilities or obstructions disturbed or damaged shall be immediately restored or replaced by the Contractor.

1.8 Excavation in Poor Soil

If materials below the excavation subgrade for pipes or structures are found to be soft or unstable or include ashes, cinders, refuse or organic material, or fragments of inorganic material that cannot, in the opinion of the District Inspector and/or the geotechnical engineer, satisfactorily support the pipe or structure, the contractor shall further excavate to remove the unsuitable material. The excavated volume shall be replaced with structural material compacted to a minimum of 98% standard proctor or as recommended by the geotechnical engineer back to pipe or structure subgrade. The pipe or structure shall then be installed per specifications.

1.9 Surplus Excavation Material

All surplus excavation shall be removed from the job site and disposed of properly. If the surplus excavation is disposed of on private property, prior written permission shall be obtained from the owner of the property and submitted to the District Inspector. All materials must be removed in a timely manner and to the satisfaction of the District Inspector.

1.10 Blasting

In general, blasting will be allowed in order to expedite the work if a permit by the local authority having jurisdiction is granted. All explosives and appurtenances shall be transported, handled, stored, and used in accordance with the laws of the local, state, and federal governments, as applicable.

All blasting shall be controlled so as not to injure any existing structure, utility or facility. Blasting in a trench shall occur only after trench walls are shored or braced in a manner that is satisfactory to the District. The protection of life and property and all liability for blasting shall be placed solely on the person or persons conducting the blasting operation. The hours of blasting shall be in accordance with the permit of the local authority.

1.11 Dewatering

All pipe trenches or structure excavation shall be kept free from water during pipe installation and other related work. The method of dewatering shall provide for a completely dry foundation at the final lines and grades of the excavation.

Dewatering shall be accomplished by the use of well point, sump pumps, rock or gravel drains placed below subgrade foundations or subsurface pipe drains. All water shall be disposed of in a suitable manner without being a menace to public health or causing public inconvenience in accordance with the Contractor's CDPHE permit. Contractor shall obtain any required permits for construction dewatering and the discharge associated with dewatering. No water shall be drained into other work being completed or under construction.

The dewatering operation shall continue until such time as it is safe to allow the water table to rise in the excavations. Pipe trenches shall contain enough backfill to prevent pipe flotation. When pipe is installed in a casing or tunnel longer than 30-pipe diameters, the pipe inside the casing or tunnels shall be secured so flotation does not occur when the pipe is empty.

Water shall not be allowed to rise until any concrete has set and the forms have been removed. Water shall not be allowed to rise unequally against unsupported structural walls.

Clay barriers may be required where groundwater is encountered, anticipated or by the direction of the Engineer. Refer to Appendix C and Appendix D for groundwater barrier application in Water and Sewer main construction, respectively.

1.12 Tracer Wire

1.12.1 Materials

General

Tracer wire shall be installed with all buried main and service pipelines in the water and wastewater system. The Applicant shall submit plans for a complete tracer wire system for all projects.

All tracer wire shall have HDPE insulation intended for direct bury, color coded per American Public Works Association (APWA) standard for the specific utility being marked. Wire insulation for potable water will be colored **blue** and wire insulation for wastewater will be colored **green.** Wire insulation for the lead from the grounding anode will be colored **red.**

Open Trench - Tracer wire shall be #12 AWG Copper Clad Steel, or Solid Copper, High Strength with minimum 300 lb. break load, with minimum 30 mil HDPE insulation thickness.

Directional Drilling/Boring - Tracer wire shall be #12 AWG Copper Clad Steel, Extra High Strength with minimum 1,150 lb. break load, with minimum 30 mil HDPE insulation thickness.

Pipe Bursting/Slip Lining - Tracer wire shall be 7 x 7 Stranded Copper Clad Steel, Extreme Strength with 4,700 lb. break load, with minimum 50 mil HDPE insulation thickness.

Approved Manufacturer: Copperhead Industries, Pro Line Safety Products, or approved equal.

Connectors

All mainline tracer wire must be interconnected in intersections, at mainline tees and mainline crosses. At tees, the three wires shall be joined using a single 3-way lockable connector. At Crosses, the four wires shall be joined using a 4-way connector. Use of two 3-way connectors with a short jumper wire between them is an acceptable alternative.

Direct bury wire connectors – shall include 3-way lockable connectors and mainline to lateral lug connectors specifically manufactured for use in underground tracer wire installation. Connectors shall be dielectric silicone filled to seal out moisture and corrosion, and shall be installed in a manner so as to prevent any uninsulated wire exposure.

Non locking friction fit, twist on or taped connectors are prohibited.

Approved Manufacturers: Burndy Split Bold Connector, copper to copper, square head with King Innovation Split Bolt Aqua Housing 69105 or Copperhead Industries Snakebite Connector, or approved equals.

Termination/ Access

All tracer wire termination points at water service curb stops and sewer service cleanouts must utilize an approved tracer wire access box (above ground access box or grade level/in-ground access box as applicable), specifically manufactured for this purpose as specified below for the type of pipeline.

All grade level/in-ground access boxes shall be appropriately identified with “sewer” or “water” cast into the cap and be color coded.

A minimum of two (2) feet of service loop wire is required in all tracer wire access boxes after meeting final elevation.

All tracer wire access boxes must include a manually interruptible conductive/connective link between the terminal(s) for the tracer wire connection and the terminal for the grounding anode wire connection.

Grounding anode wire shall be connected to the identified (or bottom) terminal on all access boxes.

Grounding

Tracer wire must be properly grounded at all dead ends/stubs and at all connection points to existing systems without tracer wire.

Grounding of tracer wire shall be achieved by use of a drive-in magnesium grounding anode rod with a minimum of 20 feet of #12 red HDPE insulated copper clad steel or solid copper wire connected to anode (minimum 1 lb.) specifically manufactured for this purpose, and buried at the same elevation as the utility.

When grounding the tracer wire at dead ends/stubs, the grounding anode shall be installed in a direction 180 degrees opposite of the tracer wire, at the maximum possible distance.

Where the anode wire will be connected to a tracer wire access box, a minimum of two (2) feet of service loop is required after meeting final elevation.

1.12.2 Installation

General

Tracer wire installation shall be performed in such a manner that allows proper access for connection of line tracing equipment, proper locating of wire without loss or

deterioration of low frequency (512Hz) signal for distances in excess of 1,000 linear feet, and without distortion of signal caused by multiple wires being installed in close proximity to one another.

Tracer wire systems must be installed as a single continuous wire, except where using approved connectors. No looping or coiling of wire is allowed.

Any damage occurring during installation of the tracer wire must be immediately repaired by removing the damaged wire, and installing a new section of wire with approved connectors. Taping and/or spray coating are prohibited.

Tracer wire shall be installed at the top half of the pipe and secured (taped/tied) at five (5) feet intervals.

Tracer wire must be properly grounded as specified.

At all water and wastewater mainline dead-ends, and at water service line curb stops and wastewater service line cleanouts closest to the property being served, tracer wire shall go to ground using an approved connection to a drive-in magnesium grounding anode rod, buried at the same depth as the service. (See Grounding)

If no mainline tracer wire exists at a connection point, mainline trace wire shall not be connected to existing conductive pipes. Treat as a mainline dead end, ground using an approved waterproof connection to a grounding anode buried at the same depth as the main.

All service lateral tracer wire shall be a single wire, connected to the mainline tracer wire using a mainline to lateral lug connector, installed without cutting/splicing the mainline tracer wire.

In occurrences where an existing tracer wire is encountered on an existing utility that is being extended or tied into, the new tracer wire and existing tracer wire shall be connected using approved splice connectors.

Sanitary Sewer System

A mainline tracer wire must be installed, with all service lateral tracer wire properly connected to the mainline tracer wire, to ensure full tracing/locating capabilities from a single connection point.

Lay mainline tracer wire continuously, by-passing around the outside of manholes/structures on the North or East side. Manholes/structures shall have a locating wire connected to the mainline tracer wire and brought up the outside of the structure and installed through a notch cut at the top of the precast cone section,

beneath the lid, protected with Ram-Nek material. Wire shall be left with a minimum two (2) foot service loop.

A grounding anode shall be installed at all dead end mainline manholes. The mainline tracer wire and the grounding anode lead wire shall be installed up the manhole barrel section. Access to the wire will be provided by cutting a small notch in the top of the manhole cone section and protecting the wire with Ram-Nek material. A minimum of two (2) foot service loop will be provided in each manhole.

Tracer wire on all sewer service laterals must terminate at an approved tracer wire access box color coded green and located directly adjacent to the sewer service cleanout closest to the structure being served. A grounding anode shall be installed beneath the cleanout at the depth of the service.

Access Box Approved Manufacturer: Copperhead Industries Snake-Pit or approved equal.

Water System

A mainline tracer wire must be installed, with all service lateral tracer wire properly connected to the mainline tracer wire, to ensure full tracing/locating capabilities from a single connection point.

Lay mainline tracer wire continuously, by-passing around the outside of valves and fittings on the North or East side. Water system valves shall have a tracer wire connected to the mainline tracer wire and brought up the outside of the valve box and inserted into the valve box with a minimum of two (2) feet of spare wire.

Tracer wire on all water service laterals must daylight at an approved tracer wire access box color coded blue and located adjacent to the curb stop. .

Access box approved manufacturer: Copperhead Industries Snake-Pit or approved equal.

Hydrants – Tracer wire must terminate at an approved above-ground tracer wire access box, properly affixed to the hydrant grade flange. (Affixing with tape or plastic ties shall not be acceptable). Approved manufacturer: Copperhead Cobra Access point with hydrant flange package.

Tracer wire shall terminate at the structure being served with a buried grounding anode beneath the service line at the building foundation or other entry point.

All conductive and non-conductive service lines shall include tracer wire.

Prohibited Products and Methods

The following products and methods shall not be allowed or acceptable

- Uninsulated tracer wire
- Stranded copper wire in all applications
- Tracer wire insulations other than HDPE
- Non locking, friction fit, twist on or taped connectors
- Brass or copper ground rods
- Wire connections utilizing taping or spray-on waterproofing
- Looped wire or continuous wire installations, that has multiple wires laid side-by-side or in close proximity to one another
- Tracer wire wrapped around the corresponding utility
- Brass fittings with tracer wire connection lugs
- Connecting tracer wire to existing conductive utilities

1.12.3 Testing

All new mainline tracer wire installations shall be located by the applicant using typical low frequency (512Hz) line tracing equipment, witnessed by the inspector, contractor, engineer and facility owner as applicable, prior to acceptance of ownership.

This verification shall be performed upon completion of rough grading and again prior to final acceptance of the project.

Continuity testing in lieu of actual line tracing shall not be accepted.

1.13 Pipe Zone Bedding Material

The limits of pipe zone bedding shall be from a minimum of six inches (6") below the bottom of the pipe to 12 inches (12") above the top of the pipe. Approved trench backfill may then be installed to the ground line.

Acceptable types of pipe zone bedding material allowed:

(a) 3/4 inch minus: Class 6 Aggregate Base Course, per Section 703.03 (Table 703-3) of the CDOT 2011 Standard Specifications for Road and Bridge Construction-without asphalt material. Soil that meets the requirements of ASTM D 2321 Soil Classifications Class II or Class III bedding material. The material should have a minimum of 30 percent passing the No. 4 screen and less than 50 percent passing the No. 200 screen.

(b) Screened rock: No. 6 or No. 67 Coarse Aggregate, per Section 703.02 (Table 703-2) of the CDOT 2011 Standard Specifications.

(c) 3/8 inch screened rock or Squeegee Sand, with 100% of the material passing a 3/8 inch screen and 0-5% passing a No. 200 screen.

Where future excavation is anticipated, the sloughing properties of unconfined screened rock should be taken into consideration and the District may require soil or select import. In areas where groundwater may be present, the use of screened rock for bedding is prohibited.

Flow-fill, as specified by CDOT 2011 Standard Specifications, Section 206.02 & 206.03, may be used as bedding with District approval. Compressive strength at 28 days: 50 to 150 psi when molded and cured in accordance with ASTM D 4832.

The maximum particle size of pipe bedding should generally not exceed 1-1/2 (one & a half) inches or 10 percent of the nominal pipe diameter, whichever is less. Bedding for small pipe such as service lines should generally have a maximum particle size not exceeding 3/8 inch.

Additional Requirements:

(a) All bedding materials shall be free of topsoil, organic materials, asphalt, frozen matter, debris, or other deleterious materials.

(b) Backfilling shall be conducted in a continuous manner to prevent damage to the pipe and its coating and kept as close to the pipe laying operation as possible.

(c) Materials not meeting these requirements shall be used only with prior written approval of the District.

In specific areas, such as where access is extremely limited, the use of on-site materials may be allowed, and, when used, must be on-site 1 1/2 inches minus well-graded screened material, free from organic materials, chunks of soil, frozen material, debris, or other suitable materials. Use of on- site bedding material must have prior written District approval.

1.14 Insulation Board

Insulation shall, where required, be in accordance with ASTM C578-Type V Standard Specification for Rigid Cellular Polystyrene Thermal Insulation. Compressive Strength shall be 100 psi minimum per ASTM D1621. Water Absorption, ASTM C272, 0.3% by volume, maximum. DOW STYROFOAM™ HIGHLOAD 100, OWENS CORNING FOAMULAR 1000 or approved equal.1” of insulation board may be substituted for each 1’ of soil cover required to meet the minimum cover requirement, minimum 2” insulation required.

1.15 Pipe Zone Backfill and Compaction

After completion of the trench excavation and proper preparation of the foundation, six inches (6") of bedding material (per Section E 1.12) shall be placed on the trench bottom for support under the pipe. Pipe bedding shall be graded to provide for a uniform and continuous support beneath the pipe at all points. Bell holes shall be dug deep enough to provide a minimum of two inches (2") of clearance between the bell and bedding material. All pipes shall be installed in such a manner as to ensure full support of the pipe barrel over its entire length. After the pipe is adjusted for line and grade, and the joint is made, the bedding material shall be deposited and densified under pipe haunches to prevent lateral displacement and hold the pipe in proper position during subsequent pipe jointing, bedding and backfilling operations.

The bedding material shall be placed in 6 inch maximum lifts & should be tamped under the haunches of the pipe to spring line. The bedding should be compacted to a minimum of 90 percent at +/- 2 percent of optimum moisture content, referencing Standard Proctor (ASTM D698/ AASHTO T99). The compaction of pipe bedding is not required when using squeegee sand or screened rock. The only requirement is sufficient tamping to achieve uniform support under the pipe. Special care shall be used in placing this portion of backfill so as to avoid disturbing the pipe.

The limits of pipe zone bedding shall be from a minimum of six inches (6") below the bottom of the pipe to 12 inches (12") above the top of the pipe. Approved trench backfill may then be installed to the ground line.

1.16 Trench Backfill Material

Starting 1’ above the top of pipe and out of the pipe bedding zone, the trench shall be backfilled with native materials excavated from the work site unless deemed unsuitable by the District. Wet, soft or frozen material, asphalt and concrete chunks, cinders, ashes, refuse, vegetation or organic material, boulders, large rocks or other deleterious substances are unsuitable materials and shall not be used for backfill. If the excavated material is not suitable for backfill, as determined by the District, suitable material shall be hauled in and utilized, and the rejected material hauled away and disposed of properly. Suitable backfill material includes:

Class 1 or Class 2 Structure Backfill per Section 703.08 of the CDOT 2011 Standard Specifications.

Pit run - Class 3 Aggregate Base Course, per Section 703.03 (Table 703-3) of the CDOT 2011 Standard Specifications with the following modifications: material to be reasonably well graded 6-inch minus pit run material. Fill/reject sand shall not be allowed as imported pit run.

Screened rock: No. 467 Coarse Aggregate, per Section 703.02 (Table 703-2) of the CDOT 2011 Standard Specifications.

Where future excavation is anticipated, the sloughing properties of unconfined screened rock should be taken into consideration and the District may require soil or select import. In areas where groundwater may be present, the use of screened rock for backfill is prohibited.

Flow-fill, as specified by CDOT 2011 Standard Specifications, Section 206.02 & 206.3, may be used as backfill with District approval. Compressive strength at 28 days: 50 to 150 psi when molded and cured in accordance with ASTM D 4832.

No rocks over 6" in diameter are allowable 12” above the pipe bedding zone and in the top 12" of trench and no backfill material with rocks larger than 12" in diameter is allowable.

1.17 Trench Backfill Compaction

Above the pipe bedding zone, the trench backfill material shall be placed in loose 12-inch lifts. Backfill shall be consolidated and/or compacted by vibrating, tamping or a combination thereof, to the satisfaction of the appropriate controlling authority or geotechnical engineer’s recommendations.

The District shall require that in all instances where the trench is within limits of pavement, shoulders of roads, sidewalks, structures or major improvements, the compaction of predominately cohesive soils shall not be less than 95 percent (95%) of maximum dry density for cohesive soils as determined by ASTM D 1557/AASHTO T180 within 2% of optimum moisture content for meeting ASTM D 1557 requirements for compaction. For clay soils the moisture content shall be 0 to +2% of optimum moisture. For non-cohesive soils compact to not less than 70 percent (70%) relative density per ASTM D4253/ D4254, or the more restrictive local specification.

Where trenches are outside pavement and located in areas where trench settlement can be tolerated, the compaction of the cohesive soil shall not be less than 90 percent (90%) as determined by ASTM D 1557/AASHTO T180, within 2 percent (2%) optimum moisture content.

Backfilling shall be conducted in a continuous manner to prevent damage to the pipe and its coating and kept as close to the pipe laying operation as possible.

The District will require copies of all compaction reports to be submitted to District Inspectors to ensure compaction compliance.

1.18 Cleanup

Upon completion of the work, all rubbish, unused materials, concrete forms and other like materials shall be removed from the job site. All excess excavation material shall be disposed of as specified herein and the areas shall be left in a state of order and cleanliness. Cleanup shall be performed within ten (10) days of the completion of construction or in accordance with an acceptable arrangement made between all parties involved. Cleanup shall be to the satisfaction of the District Inspector or local authority.

1.19 Surface Restoration

General Requirements

The Contractor shall obtain the necessary road cut permits for the project from the governing agency and adhere to all requirements therein. The width of pavement removed shall meet the standards of the governing agency. At a minimum, the Contractor shall saw cut the pavement along straight lines. The cut face of the remaining pavement shall be approximately vertical.

The Contractor shall bring all existing District appurtenances to grade in accordance with District Specifications. The Contractor shall restore all pavement, sidewalks, curbing, gutters or other surface structures removed or disturbed as part of the work to a condition equal to existing or meeting the standards of the governing agency, or property owner, and shall furnish all incidental labor and materials. Surface cuts shall be, at a minimum, restored to a condition equal to those prior to construction. No permanent pavement shall be restored until the backfill is properly compacted (per Appendix E, Section 1.15). Place aggregate base course in accordance with permit requirements, geotechnical engineer's requirements or as shown on the plans. At a minimum, compact aggregate base course to 95% AASHTO T180/ASTM D 1557. Replace pavement in accordance with permit requirements, geotechnical engineer's requirements or as shown on the plans. Consolidate concrete with vibrators.

Damaged Surfaces and Property

If any pavement, street, landscaping, sod, rock, fences, poles or other property and surface structures have been damaged, removed or disturbed by the Contractor, either deliberately or through failure to carry out the requirements of the governing agency or the specific directions of the District, or through failure to employ usual and reasonable safeguards, such property shall be replaced or repaired to original condition and to the satisfaction of the Applicant, at the expense of the Contractor. All restoration shall be performed in a timely manner not to exceed three (3) working days and to the satisfaction of the District Inspector or by a date mutually agreed upon by the District and Applicant and Contractor and Applicant.

Directional Boring/ Trenchless Installation

Water and sewer main installation by directional boring or trenchless methods may be required in certain instances. This type of installation could lead to reduced accessibility for future District maintenance and repair efforts. Trenchless installation will be reviewed and approved by the District on a case-by-case basis. In order to receive approval for this installation method, the applicant will be required to submit the following information:

Written justification for utilizing trenchless technology

- Directional boring plans and technical specifications including pipe materials
- Qualifications of the directional boring contractor
- Other supplemental information that may be reasonably requested by the District.

The applicant should note that all requirements for testing and acceptance of water and sewer mains will remain in full force and effect regardless of the installation methodology. The District may require continuous oversight by District inspectors during boring and pipe installation operations.

SECTION II -DETAILS

E-01: Main Trench Section